EWF10746
EWF12746

EN	Washing Machine	User Manual	2
ZH	洗衣機	使用手冊	34

Electrolux

WE’RE THINKING OF YOU

Thank you for purchasing an Electrolux appliance. You’ve chosen a product that brings with it decades of professional experience and innovation. Ingenious and stylish, it has been designed with you in mind. So whenever you use it, you can be safe in the knowledge that you’ll get great results every time. Welcome to Electrolux.

Visit our website to:

Get usage advice, brochures, trouble shooter, service information, buy accessories & spare parts, online product registration : **www.electrolux.com**

CUSTOMER CARE AND SERVICE

We recommend the use of original spare parts.When contacting Service, ensure that you have the following data available. The information can be found on the rating plate. Model, PNC, Serial Number.

Warning / Caution-Safety information.
General information and tips
Environmental information.

Subject to change without notice.

CONTENTS

1. SAFETY INFORMATION
1.1 Conditions Of Use 4
1.2 Child Safety 4
1.3 Child Safety Device (Door Block Button) 5
1.4 General Safety 5
1.5 Installation 6
1.6 Use 6

2. PRODUCT DESCRIPTION
2.1 Parts 7
2.2 Accessories 8

3. CONTROL PANEL
3.1 Control Panel Description 9
3.2 Display 9
3.3 Program Chart 10
3.4 Program Options Compatibility 11
3.5 Options 11
3.6 Settings 12
3.7 Start/Pause (▷‖) and Add Clothes ( ) Touchpad 13

4. BEFORE FIRST USE 13

CONTENTS

5. DAILY USE
5.1 Loading The Laundry 14
5.2 Using Detergent And Additives 14
5.3 Options Setting 16
5.4 Starting A Cycle (▷‖) 16
5.5 Interruption Of A Program 16
5.6 Changing A Program 16
5.7 Changing The Options 16
5.8 Opening The Door 16
5.9 At The End Of The Program 17
5.10 When The Washing Program Is Completed, But There Is Water In The Drum 17
5.11 AUTO Standby Mode 17

6. WASHING HINTS
6.1 Sorting The Laundry 18
6.2 Temperatures 18
6.3 Before Loading The Laundry 18
6.4 Maximum Loads 18
6.5 Removing Stains 18
6.6 Detergents Type And Quantity Of Detergent 19

7. INTERNATIONAL WASH CODE SYMBOLS 20

8. CARE AND CLEANING
8.1 External Cleaning 20
8.2 Descaling 20
8.3 After Each Wash 20
8.4 Maintenance Wash 21
8.5 Cleaning The Dispenser Drawer 21
8.6 Cleaning The Drawer Recess 21
8.7 Cleaning The Pump 21
8.8 Cleaning The Water Inlet Filter 24
8.9 Frost Precautions 24

9. TROUBLESHOOTING
9.1 Possible Failures 25
9.2 Emergency Door Opening 27

10. TECHNICAL DATA 28

11. INSTALLATION
11.1 Unpacking 29
11.2 Positioning 30
11.3 Water Inlet 31
11.4 Water Drainage 31
11.5 Electrical Connection 32

12. ENVIRONMENT CONCERNS
12.1 Packaging Materials 33
12.2 Old Machine 33
12.3 Ecological Hints 33

1. ⚠ SAFETY INFORMATION

1.1 Conditions Of Use

This appliance is intended to be used in household and similar applications such as:

- Farm houses
- By clients in serviced apartments, holiday apartments and residential type environments.

⚠ **WARNING!** The appliance must not be supplied through an external switching device, such as timer, or connected to a circuit that is regularly switched on and off by utility.

In the interest of your safety and to ensure the correct use, before installing and first using the appliance, read this user manual carefully, including its hints and warnings.

To avoid unnecessary mistakes and accidents, it is important to ensure that all people using the appliance are thoroughly familiar with its operation and safety features.

Save these instructions and make sure that they remain with the appliance if it is moved or sold, so that everyone using it through its life will be properly informed on appliance use and safety.

1.2 Child Safety

- This washing machine is not intended for use by young children or infirm persons without supervision.
- Young children should be supervised to ensure that they do not play with the appliance.
- The packaging components (e.g. plastic film, polystyrene) can be dangerous to children - danger of suffocation! Keep them out of children’s reach.

- Keep all detergents in a safe place out of children's reach.
- Make sure that children or pets do not climb into the drum.
- This machine is provided with child safety lock option ( ) to prevent children playing with the control panel. (see page 12)

1.3 Child Safety Device (Door Block Button)

When you activate this device, you cannot close the door. This prevents children or pets to be locked in the drum.

- To activate this device, rotate the button (WITHOUT pressing it) inside the door clockwise until it stops. If necessary use a coin.

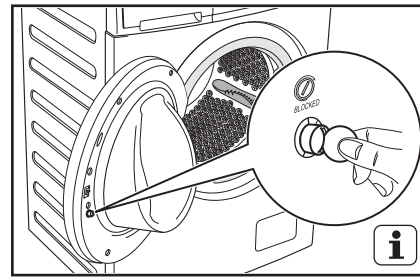

- To disable this device and restore the possibility of closing the door, rotate the button counter-clockwise until the groove is vertical.

1.4 General Safety

- It is dangerous to alter the specifications or attempt to modify this product in any way.
- During high temperature wash program the door glass may get hot. Do not touch it!
- Make sure that small pets do not climb into the drum. To avoid this, please check inside the drum before using the appliance.
- Any objects such as coins, safety pins, nails, screws, stones or any other hard, sharp material can cause extensive damage and must not be placed into the machine.
- Wash small items such as socks, laces, washable belts etc in a washing bag or pillow case as it is possible for such items to slip down between the tub and the inner drum.
- Only use manufacturer's recommended quantities of fabric softener and detergent. Damage to the fabric or appliance can occur if you exceed the recommended amount.
- Do not use your washing machine to wash articles with whalebones, material without hems or torn material.

- Always unplug the appliance and turn off the water supply after use, clean and maintenance.
- This appliance is not intended for use by persons (including children) with reduced physical, sensory or mental capabilities, or lack of experience and knowledge, unless they have been given supervision or instruction concerning use of the appliance by a person responsible for their safety.
- Under no circumstances should you attempt to repair the machine yourself. Repairs carried out by inexperienced persons may cause injury or serious malfunctioning. Contact your local Service Centre. Always insist on genuine spare parts.

1.5 Installation

- This appliance is heavy. Care should be taken when moving it.
- When unpacking the appliance, check that it is not damaged. If in doubt, do not use it and contact the Service Centre.
- All packing and transit bolts must be removed before use. Serious damage can occur to the product and to property if this is not adhered to. See relevant section in the user manual.
- After having installed the appliance, check that it is not standing on the inlet and drain hose and the worktop is not pressing the electrical supply cable.
- If the appliance is installed on a carpeted floor, please adjust the feet in order to allow air to circulate freely.
- Always be sure, that there is no water leakage from hoses and their connections after the installation.
- Any plumbing work required to install this appliance should be carried out by a qualified plumber.
- Any electrical work required to install this appliance should be carried out by a qualified electrician.

⚠ **May cause electric shock!** if the machine is not connected to an earthed/ground system. DO NOT touch the wet clothes and metal parts.

1.6 Use

- This appliance is designed for domestic use. It must not be used for purposes other than those for which it was designed.
- Only wash fabrics which are designed to be machine washed. Follow the instructions on each garment label.
- Do not overload the appliance. See the relevant section in the user manual.
- Before washing, ensure that all pockets are empty and buttons and zips are fastened. Avoid washing frayed or torn articles and treat stains such as paint, ink, rust, and grass before washing.
- Garments which have been in contact with volatile petroleum products should not be machine washed. If volatile cleaning fluids are used, care should be taken to ensure that the fluid is removed from the garment before placing in the machine.
- Never pull the power supply cable to remove the plug from the socket; always take hold of the plug itself.
- Never use the washing machine if the power supply cable, the control panel, the working surface or the base are damaged so that the inside of the washing machine is accessible.

2. PRODUCT DESCRIPTION

2.1 Parts

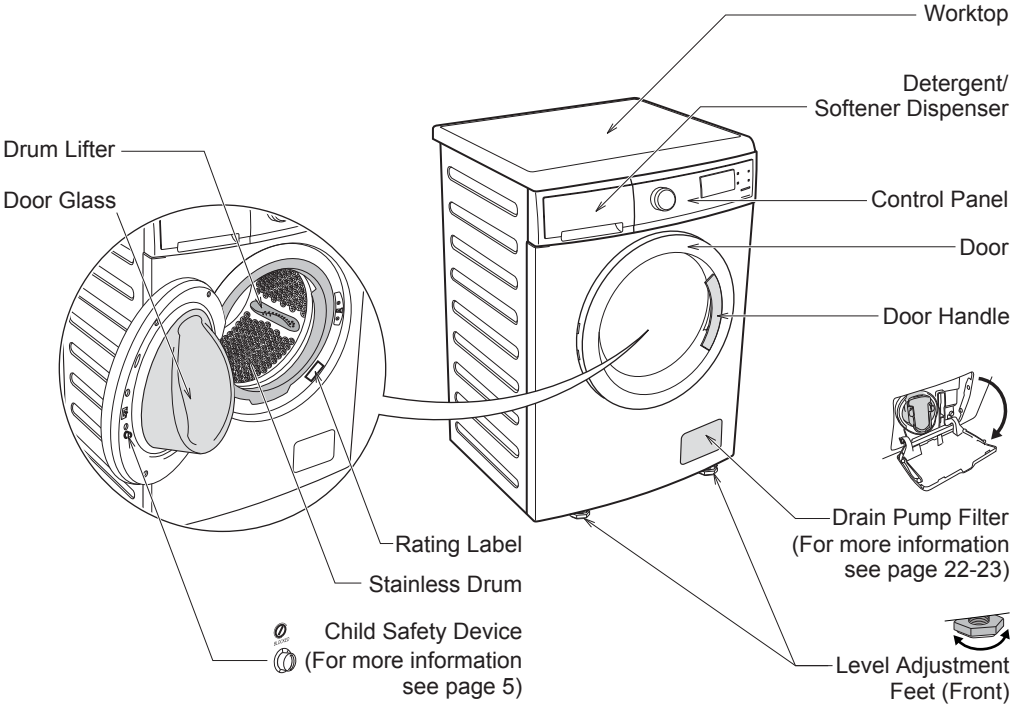

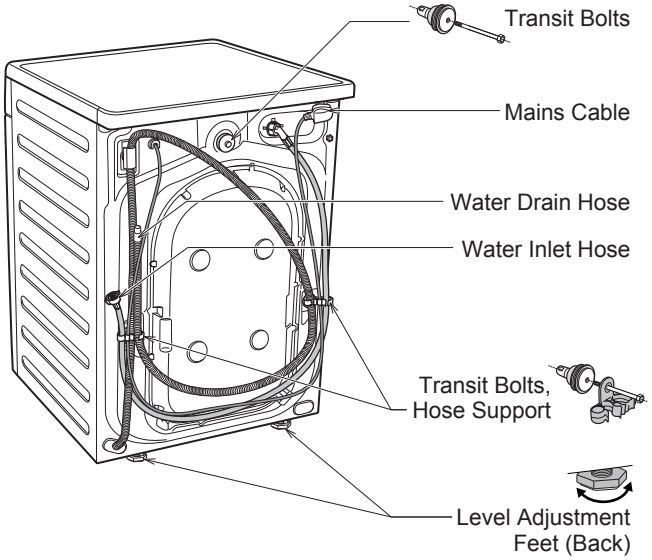

CAUTION !

All transit bolts (3 pcs) must be removed before using the appliance.

2.2 Accessories

- Plastic Caps

To close the holes on the rear side of the cabinet after the removal of the transit bolts.

- Plastic Hose Guide

To connect the drain hose on the edge of a sink.

3. CONTROL PANEL

3.1 Control Panel Description

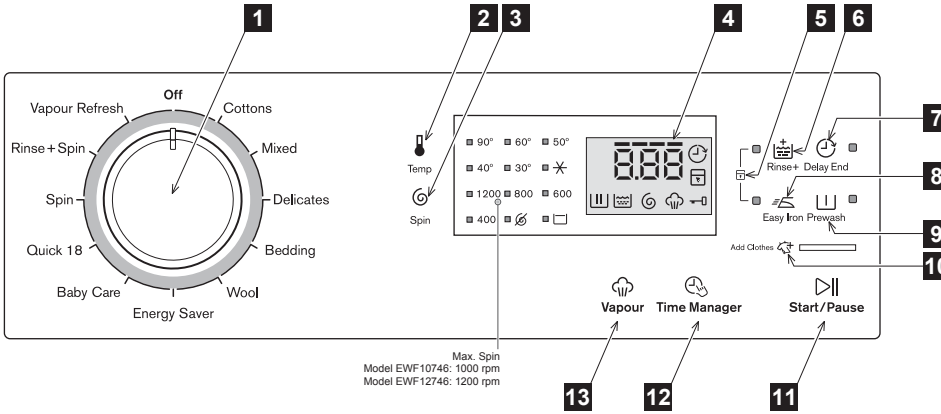

1 Program Knob
2 Temperature Touchpad
3 Spin Selection Touchpad
4 Display
5 Child Lock (see page 12)
6 Rinse Plus Touchpad
7 Delay End Touchpad
8 Easy Iron Touchpad
9 Prewash Touchpad
10 Add Clothes Function Symbol
11 Start/Pause, Add Clothes Touchpad
12 Time Manager Touchpad
13 Vapour Touchpad

3.2 Display

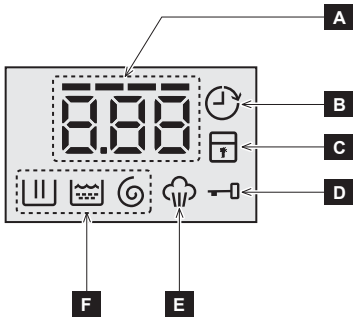

A Digital Number; will tell you:
- Washing cycle time.
- Delay End time.
- The alarm codes. Refer to the chapter “Troubleshooting” for their description.
- The level of the Time Manager (----).

B Delay End Icon
C Child Lock Icon
D Door Lock Icon
- It is on, you cannot open the door.
- It is off, you can open the door.

E Vapour Icon
F Washing Phase icon (Wash/Rinse/Spin)

3.3 Program Chart

Program ; Temperature range	Max. load (dry clothes); Max. Spin Speed		Type of load and soil level
	Model: EWF12746	Model: EWF10746	
Off	-	-	This position to reset program/switching off the machine.
Cottons [1]; ⁎ [2] to 90°C	7.5 kg ; 1200 rpm	7.5 kg ; 1000 rpm	White and coloured cotton. (Adjust wash time according to soil level. See Time Manager table on page 12)
Mixed; ⁎ to 60°C	3.5 kg ; 1200 rpm	3.5 kg ; 1000 rpm	Synthetic or mixed fabric items. (Adjust wash time according to soil level. See Time Manager table on page 12)
Delicates; ⁎ to 40°C	3.5 kg ; 1200 rpm	3.5 kg ; 1000 rpm	Delicate fabrics such as acrylics, viscose, polyester items. (Adjust wash time according to soil level. See Time Manager table on page 12)
Bedding; ⁎ to 60°C	3 kg ; 800 rpm	3 kg ; 800 rpm	Special program for one synthetic blanket, duvet, bedspread and so on. (Adjust wash time according to soil level. See Time Manager table on page 12)
Wool; ⁎ to 40°C	2 kg ; 1200 rpm	2 kg ; 1000 rpm	Specially tested program for woollen garments bearing the “Pure new woollen, non-shrink, machine washable” label.
Energy Saver; 40°C to 60°C	7.5 kg ; 1200 rpm	7.5 kg ; 1000 rpm	White and colourfast, cotton with normal soil. Set this program to have a good washing results and decrease the energy consumption. The time of the washing program is extended.
Baby Care; ⁎ to 40 °C	3.5 kg ; 1200 rpm	3.5 kg ; 1000 rpm	Baby cotton clothes and delicate knitting items with normal soil.
Quick 18; 30°C	1.5 kg ; 800 rpm	1.5 kg ; 800 rpm	Synthetic and mixed fabric items. Light soil and items to freshen up.
Spin	7.5 kg ; 1200 rpm	7.5 kg ; 1000 rpm	To spin the laundry and drain the water in the drum.
Rinse + Spin	7.5 kg ; 1200 rpm	7.5 kg ; 1000 rpm	To rinse and spin the laundry.
Vapour Refresh	1.5 kg ; Clothes tumble in vapour.		This cycle removes odours and helps to dewrinkle the laundry. ℹ This cycle no need to add detergent.

1) Cottons program with 60 °C option selected is recommended for a full load of normally soiled cottons, and is the Energy rating label program.

2) Symbol “ ⁎ ” represents Cold water.

3.4 Program Options Compatibility

Program / Option	Spin: No Spin	Spin: Rinse Hold						
Cottons	✓	✓	✓	✓	✓	✓	✓	✓
Mixed	✓	✓	✓	✓	✓	✓	✓	✓
Delicates	✓	✓	✓	✓		✓	✓	✓
Bedding	✓			✓			✓	✓
Wool	✓	✓		✓				
Energy Saver	✓	✓	✓	✓		✓	✓	✓
Baby Care	✓	✓	✓	✓		✓		✓
Quick 18	✓	✓		✓				
Spin	✓			✓				
Rinse + Spin	✓	✓		✓				
Vapour Refresh				✓				✓

1) Vapour option can be combined with temperature 40 to 90 °C only.

3.5 Options

Temperature Touchpad ( )

Press this touchpad repeatedly to increase or decrease the wash temperature if you want your laundry to be washed at a temperature different from the one proposed by the washing machine.

Spin Selection Touchpad ( )

Press this touchpad repeatedly to increase or decrease the spin speed or select Rinse Hold, if you want your laundry to be spun at a speed different from the one proposed by the washing machine.

- **No Spin ( )**

  No spin option eliminates all the spin phases and increase the number of rinses.

- **Rinse Hold ( )**

  By selecting this option, the water of the last rinse is not emptied out and the drum turns regularly to prevent the laundry creases.

  The door is still locked to indicate that the water must be emptied out.

  The door stays locked with the water in the drum. To continue the cycle, you must press ▷II (Start/Pause).

Rinse Plus Touchpad ( )

This option is recommended for people who are allergic to detergents, and in areas where the water is very soft. Press it to add 3 rinse phases to a program. The indicator of this option will be on.

Delay End Touchpad ( )

Before you start the program, this option makes it possible to define the end of the washing program from minimum of 1 hour to maximum of 19 hours.

If program duration is longer than 3 hours, minimum Delay End option starts from 4 hours.

Press the Delay End touchpad to choose the end time as you wish. The display shows the number of hours and the indicator beside the touchpad is on.

This option must be selected after choosing the wash program, and before pressing the “Start/Pause” touchpad.

For example, if the program duration of your selected program is 3.20 hours and you define the “Delay End” time to 6 hours. This means your wash program will finish in 6 hours. (See diagram)

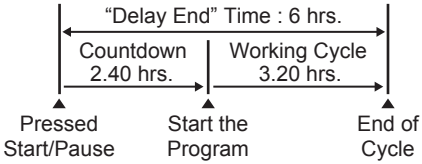

After selecting Delay End time, press Start/Pause touchpad to start the program. Machine will then countdown and update time on the display every hours until it reaches the starting point of the wash cycle.

If you wish to modify or cancel Delay End option after starting the program, follow the steps below:

- set the washing machine to PAUSE by pressing "Start/Pause" touchpad;
- deselect this option by pressing "Delay End" touchpad repeatedly till the display shows delay time " 0 ";
- press the "Start/Pause" to start the program.

Easy Iron Touchpad ( )

When selecting this option, the laundry is gently washed and spun to avoid creasing. In this way, ironing is easier. The indicator of this option will be on.

Prewash Touchpad ( )

Select this option if you wish your laundry to be pre-washed before the main wash. Use this option for heavy soil. The indicator of this option will be on.

When you set this function, put the detergent into the " " compartment.

This function increases the program duration.

Time Manager ( )

This option allows you to adjust the wash time. Press this touchpad repeatedly to decrease or increase the wash time according to the soil level of your wash. Use the table below as a guide.

Soil Level	Light	Medium	Normal	Heavy
Wash Level	–	––	–––	––––

Vapour Touchpad ( )

Select this option to add approximately 30 minutes of tumbling in vapour during the wash cycle. Vapour helps open fabric fibers up to allow laundry additives to release tough stains. The indicator of this option will be on.

NOTE:

- Vapour may not necessarily be visible inside the drum during a vapour wash cycle. Vapour is created below the drum and allowed to naturally rise into the clothes.
- Vapour may not be present during the entire vapour wash cycle.
- Vapour function is more effective with half load.
- At the end of the Vapour cycle, the clothes will be warmer, softer and detached from the drum.

If Vapour option is selected, rinse temperatures will be elevated.

During a vapour cycle, you may notice vapour exiting from the drain hose of the washing machine, this is normal and there is no cause for alarm.

3.6 Settings

Child Safety Lock Option ( )

Your appliance is provided with CHILD SAFETY LOCK which permits you to leave the appliance unsupervised with the door closed without having to worry that children might be injured by or cause damage to the appliance.

Set this option after pressing the Start/Pause touchpad.

To set "Child Lock" option:

- To activate the function, press "Rinse + ( ) and Easy Iron ( )" touchpads at the same time until the display shows the symbol " ".
- To deactivate the function, press "Rinse + ( ) and Easy Iron ( )" touchpads at the same time until the symbol " " goes off.

This function remains enabled even after the appliance is switched off.

Enabling/Disabling End-Of-Wash Buzzer

This setting permits you to either enable or disable the buzzer at the end of the program. As an example, you might wish to disable this buzzer when you start a wash when going to bed, so that when the wash finished approximately 1 hour later, it will not disturb you through the night.

Error warning beeps such as critical faults are not disabled.

To disable the buzzer sound, press “Easy Iron ( ) and Prewash ( )” touchpads at the same time for 3 seconds, and listen for “BEEP, BEEP”.

To return to default configuration press these 2 touchpads at the same time for 3 seconds, and listen for “BEEP”.

3.7 Start/Pause (▷‖) and Add Clothes ( ) Touchpad

This touchpad has 2 functions:

- **Start/Pause (▷‖):**

  After you have selected the desired program and options, press this touchpad to start the machine. The Start/Pause pilot light will stop flashing and remain lit until the water level is above the bottom edge of the door then pilot light goes OFF. If you have selected a “Delay End” option, the countdown will begin and will be shown in the display.

  To interrupt a program which is running, press this touchpad to pause the machine, the Start/Pause pilot light flashes.

  To restart the program from the point at which it was interrupted, press this touchpad again, the Start/Pause pilot light will stop flashing.

- **Add Clothes ( ):**

  You can only add clothes if “Start/Pause” pilot light is lit.

  While running a program, you may add clothes by:

  - Pressing the “Start/Pause” touchpad to pause the program.
  - Wait for the machine to come to a complete stop before opening the door.
  - Add clothing and close the door.
  - Resume the program by pressing “Start/Pause” touchpad again.

  You cannot open the door if the water inside the machine drum are hot, the door remains locked for your safety. Although the LED light still remain lit.

4. BEFORE FIRST USE

NOTE

During installation or before first use you may observe some water in the machine. This is a residual water left in the machine after a full functional test in the factory to ensure the machine is delivered to customers in perfect working order and is no cause for concern.

1. Ensure that the electrical and water connections comply with the installation instructions.
2. Put 2 litres of water in the detergent compartment for washing phase. This activates the drain system.
3. Select a Cottons cycle at 90 °C, without any laundry in the machine, to remove any manufacturing residue from the drum and tub then start the machine.

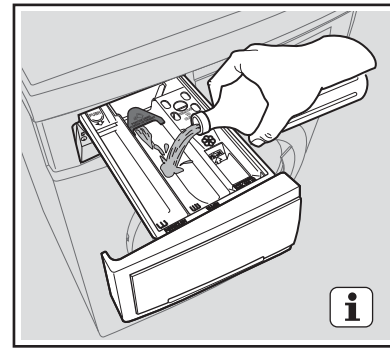

5. DAILY USE

5.1 Loading The Laundry

1. Turn the water tap on.
2. Connect the main plug to the main socket.
3. Turn the knob to set a program. The washing machine will propose a temperature and automatically select the spin value provided for the program you have chosen.

   The selector knob can be turned either clockwise or anticlockwise.

   Position “Off” to reset program/ switching OFF the machine.

   At the end of the program the selector dial must be turned to position “Off”, to switch the machine off.
4. Check and remove objects (if there are any) that could be trapped in the fold.

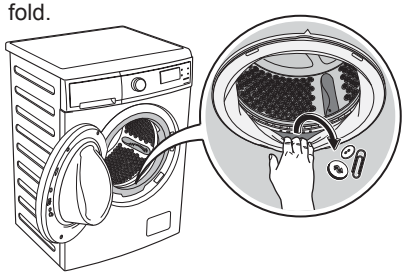

5. Place the laundry in the drum, one item at a time, shaking them out as much as possible. (Refer to page 18 “WASHING HINTS”)
6. Close the door.

CAUTION

Make sure that no laundry remains between the seal and the door.

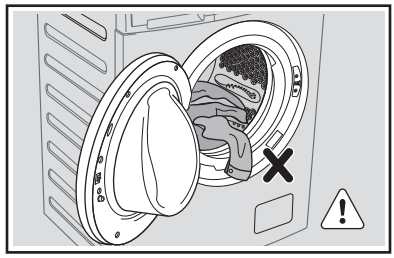

5.2 Using Detergent And Additives

IMPORTANT: Please read “Detergents Type and Quantity of Detergent”on page 19 before use.

1. Detergent Dispenser Drawer

   The detergent dispenser is divided into three compartments.

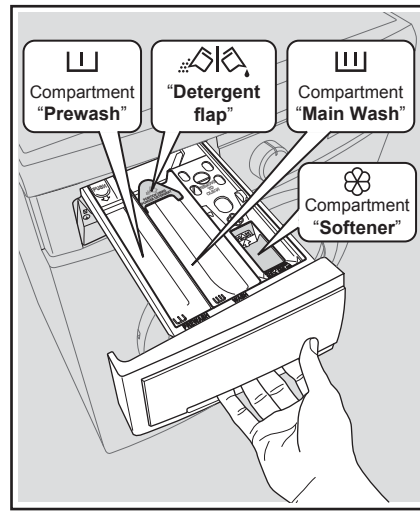

- **Compartment “MAIN WASH”**

  This compartment is used for detergent on all programs.
- **Compartment “PREWASH”**

  This compartment is only used for detergent when a Prewash is selected.
- **Compartment “SOFTENER”**

  This compartment is used for fabric conditioner and starching agent.

- **Detergent flap**
  Flap for powder or liquid detergent.

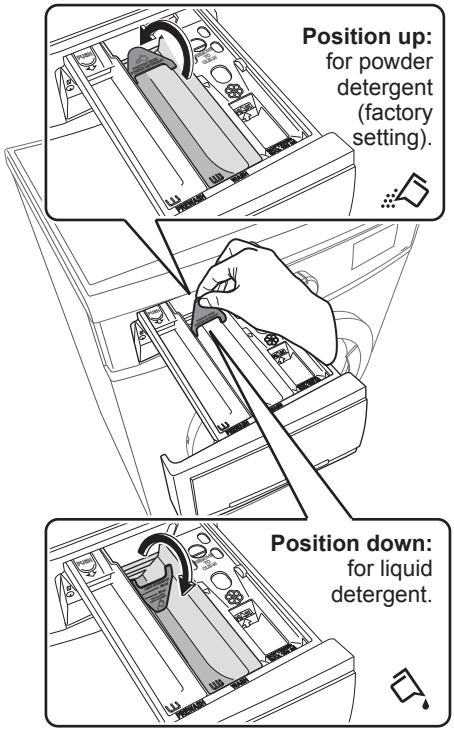

When you use the liquid detergent:

- Do not use gelatinous or thick liquid detergents.
- Do not put more liquid than the maximum level.
- Do not set the “Prewash” phase.
- Do not set the “Delay End”.

2. Measure out the detergent and the fabric softener;

- Pull out the dispenser drawer until it stops.
- Measure out the amount of detergent required, pour it into the main wash compartment.

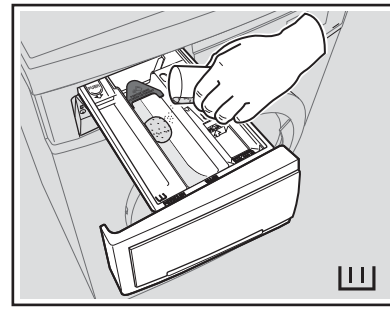

- If you wish to carry out the “Prewash” phase, pour it into the compartment marked .

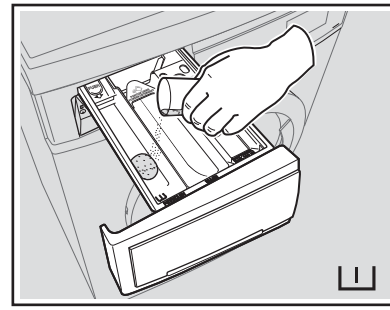

- If required, pour fabric softener into the compartment marked “ ”.

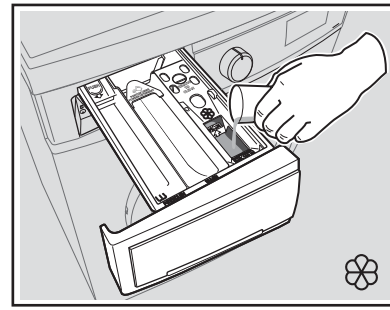

NOTE:
The amount used must not exceed the “MAX” mark in the drawer.
If you use thick softeners it is recommended to dilute with water.

- Close the drawer gently.

Residues of detergent, softener and water may remain in the dispenser. It is recommended to clean the dispenser regularly to remove any residue.

5.3 Options Setting

1. If you want your laundry to be spun or use temperature different from the one proposed by the washing machine, pess the Spin “ ” and the temperature “ ” touchpads repeatedly to change the spin speed and temperature.

   Press the option touchpads, if you want your laundry to be washed with special functions.

   - Different functions can be combined which is dependent on the program selected.
   - If an option is not compatible with the wash program selected, symbol “ --- ” will flash on display along with buzzer sound.

2. If you want to adjust washing time, press the “Time Manager ( )” touchpad repeatedly to increase or decrease washing time. See Time Manager guide on page 12.

   If you want to define the end of the washing program, press the “Delay End ( )” touchpad repeatedly to choose your washing machine working time.

5.4 Starting A Cycle ( )

To start a program, press the Start/Pause touchpad. The corresponding pilot light will stop flashing and a default program duration will be displayed on the screen.

- If you press any touchpad while a program is operating, symbol “ --- ” will flash on display along with buzzer sound. (except Start/Pause touchpad)
- If you turn the program selector knob to another program when the machine is working (except “Off” to switch off the machine), symbol “ --- ” will flash on display along with buzzer sound to indicate a wrong selection. The machine will not perform the new selected program.

After approx. 15 minutes from the start of a program:

- The appliance will automatically adjust the selected program duration according to the type and size of the load.
- The display will show adjusted program duration.

5.5 Interruption Of A Program

- To pause, press Start/ Pause. The indicator will start flashing.
- Press the Start/Pause again. The program will continue.

5.6 Changing A Program

Changing a running program is possible only by resetting it.

- Turn the program selector knob to the position “Off” to cancel the program and to turn off the appliance.
- Turn the program selector knob to the new program position and change any available options. Press Start/Pause to start the new program.

The appliance will not drain the water (except programs; Spin, Rinse + Spin, Vapour Refresh).

5.7 Changing The Options

It may be possible to change some of the options after a wash program has started.

1. Press the touchpad Start/Pause. The indicator will start flashing.
2. If available change the options that you wish.
3. Press Start/Pause again. The program will continue.

5.8 Opening The Door

While a program or the Delay End is operating, the appliance door is locked and the display shows the indicator “ ”. First, set the machine to PAUSE by pressing the “Start/Pause” touchpad. Wait until the door lock indicator “ ” goes off, then the door can be opened.

If the door lock indicator “ ” does not disappear, this means that the machine is already heating and the water level is above the bottom edge of the door or the drum is turning. In this case the door CAN NOT be opened. If you need to open it, you must drain the water to open the door.

In case of emergency please refer to “Emergency door opening” on page 27.

5.9 At The End Of The Program

- The appliance stops automatically.
- The acoustic signal will operate.
- The display will show “ 0 ”.
- The indicator of the touchpad Start/Pause goes off.
- The door lock indicator “ ⊸▯ ” goes off.
- Remove the laundry from the appliance. Make sure that the drum is empty.
- Keep the door partly open, to prevent the mildew and odours.
- Turn off the water tap.

NOTE:
At the end of the program, the time remaining can suddenly decrease from 7 minutes or less to 0 due to the overestimated total program time during the load sensing phase. In some cases (with perfectly balanced load) the program time can be shorter than the time estimated after the load sensing phase is completed. This is a normal behavior of the machine and not a cause for concern as it does not compromise its performance.

5.10 When The Washing Program Is Completed, But There Is Water In The Drum

(Option “Rinse Hold” is used)

- The drum turns regularly to prevent the creases in the laundry.
- The indicator “Start/Pause” flashes to remind you to drain the water.
- The door lock indicator “ ⊸▯ ” is on. The door stays locked.

You must drain the water to open the door.

To drain the water:

1. Press the “Start/Pause ▷‖” touchpad. The appliance drains the water and spins with the maximum spin speed for selected program.

   Alternatively, before pressing the “Start/Pause” touchpad, you can press the “Spin ⊙” touchpad to change the spin speed. You can select “No Spin”, if you want the machine to only drain the water.

2. When the program is completed and the door lock indicator “ ⊸▯ ” goes off, you can open the door.
3. turn the program selector knob to the position “Off” to deactivate the appliance.

NOTE:
After approximately 18 hours, if you do not press Start/Pause touchpad, the appliance will drain and spin automatically (except for “Wool” program) .

5.11 AUTO Standby Mode

The AUTO Standby mode automatically deactivates the appliance to decrease the energy consumption when:

- You do not press any buttons for 5 minutes before you press “Start/Pause”.
  - All indicators and the display will switch off.
  - The indicator of the touchpad Start/Pause will flash slowly.

  Press any touchpad to reactivate the appliance.

- 5 minutes after the washing program ends, if you do not deactivate the appliance, the energy saving function activates.
  - All indicators and the display will switch off.
  - The indicator of the touchpad Start/Pause will flash slowly.

  Press any touchpad to reactivate the appliance.

  - Display will show the end of the last wash.
  - Press any touchpad again to show the last wash program.
  - Turn the selector knob to set a new wash program.

6. WASHING HINTS

6.1 Sorting The Laundry

Follow the wash code symbols on each garment label and the manufacturer's washing instructions. Sort the laundry as follows: whites, coloureds, synthetics, delicates, woollens.

6.2 Temperatures

90°C	For normally soiled white cottons and linen (e.g. teacloths, towels, tablecloths, sheets...).
60°C 50°C	For normally soiled, colourfast garments (e.g. shirts, night dresses, pajamas....) in linen, cotton or synthetic fibres and for lightly soiled white cotton (e.g.underwear).
40°C 30°C Cold	For delicate items (e.g. net curtains), mixed laundry including synthetic fibres and woollens bearing the label pure new wool, machine washable, non-shrink.

6.3 Before Loading The Laundry

- Make sure that no metal objects are left in the laundry (e.g. hair clips, safety pins, pins).
- Button up pillowcases, close zip fasteners, hooks and poppers. Tie any belts or long tapes.
- Wash bras, pantyhose and other delicates in a mesh laundry bag, which you can purchase from your supermarket.

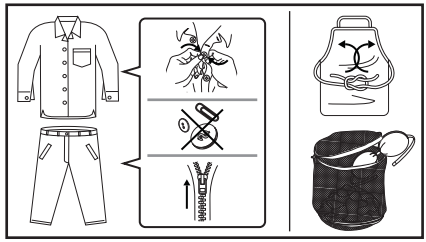

- Make sure that you wash lint collectors separately from lint producers.
- Never wash whites and coloureds together. Whites may lose their "whiteness" in the wash.
- New coloured items may run in the first wash; they should therefore be washed separately the first time.
- Remove persistent stains before washing.
- Rub particularly soiled areas with a special detergent or detergent paste. Treat curtains with special care. Remove hooks or tie them up in a bag or a net.

6.4 Maximum Loads

Recommended loads are indicated in the program charts. General rules:

Cotton, linen:	drum full but not too tightly packed;
Synthetics:	drum no more than half full;
Delicate fabrics and woollens:	drum no more than one third full.

Washing a maximum load makes the most efficient use of water and energy. For heavily soiled laundry, reduce the load size.

6.5 Removing Stains

Stubborn stains may not be removed by just water and detergent. It is therefore advisable to treat them prior to washing.

Blood: treat fresh stains with cold water. For dried stains, soak overnight in water with a special detergent then rub in the soap and water.

Oil based paint: moisten with benzine stain remover, lay the garment on a soft cloth and dab the stain; treat several times.

Dried grease stains: moisten with turpentine, lay the garment on a soft surface and dab the stain with the fingertips and a cotton cloth.

Rust: oxalic acid dissolved in hot water or a rust removing product used in cold water. Be careful with rust stains which are not recent since the cellulose structure will already have been damaged and the fabric tends to hole.

Mould stains: treat with bleach, rinse well (whites and fast coloureds only).

Grass: soap lightly and treat with bleach (whites and fast coloureds only).

Ball point pen and glue: moisten with acetone (*), lay the garment on a soft cloth and dab the stain.

Lipstick: moisten with acetone (*) as above, then treat stains with methylated spirits. Remove any residual marks from white fabrics with bleach.

Red wine: soak in water and detergent, rinse and treat with acetic or citric acid, then rinse. Treat any residual marks with bleach.

Ink: depending on the type of ink, moisten the fabric first with acetone (*), then with acetic acid; treat any residual marks on white fabrics with bleach and then rinse thoroughly.

Tar stains: first treat with stain remover, methylated spirits or benzine, then rub with detergent paste.

(*) do not use acetone on artificial silk.

6.6 Detergents Type And Quantity Of Detergent

Low sudsing detergent is required for this washing machine to prevent oversudsing problems, unsatisfied washing result and harm to the machine. Low sudsing detergents designed for front load washing machines are labelled “Front Loading”, “high efficiency”, “HE”, such as Cold Power for Front Loaders or “Matic”.

Do not use wrong types of detergent, such as Top Loading, Handwash detergent or Soap-Based products in your frontload washing machine. This can result in excessive suds, longer cycle time, low spin speeds, poor rinsing and overloading of the motor.

Quantity of detergent to be used

The choice of detergent and use of correct quantities not only affects your wash performance, but also helps to avoid waste and protect the environment. Although biodegradable, detergents contain substances which in large quantities can upset the delicate balance of nature.

The choice and quantity of detergent will depend on ;

- type of fabric (delicates, woollens, cottons, etc.) ;
- the colour of clothes ;
- size of the load ;
- degree of soil ;
- wash temperature ; and
- hardness of the water used.

Water hardness is classified by so-called “degrees” of hardness.

Information on hardness of the water in your area can be obtained from the relevant water supply company, or from your local authority.

You may have to try using the detergent quantity as per manufacturers’ instructions then compare the wash result to the list below and adjust the amount of detergent for your future washes accordingly.

Not enough washing powder causes:

- the washload to turn grey,
- greasy clothes.

Too much washing powder causes:

- sudsing,
- reduced washing effect,
- inadequate rinsing.

Use less detergent if:

- you are washing a small load,
- the laundry is lightly soiled,
- large amounts of foam during washing.

7. INTERNATIONAL WASH CODE SYMBOLS

These symbols appear on fabric labels, in order to help you choose the best way to treat your laundry.

Energetic wash **Delicate wash**	Max. wash temperature 95 °C	Max. wash temperature 60 °C	Max. wash temperature 40 °C	Max. wash temperature 30 °C	Hand wash	DO NOT wash at all
Bleaching	Bleach in cold water			DO NOT bleach		
Ironing	Hot iron max. 200 °C	Warm iron max. 150 °C		Lukewarm iron max. 110 °C	DO NOT iron	
Dry cleaning	Dry cleaning in all solvents	Dry cleaning in perchlorethylene, petrol, pure alcohol, R 111 & R 113		Dry cleaning in petrol, pure alcohol and R 113	DO NOT dry clean	
Drying	Flat	On the line	On clothes hanger	High temperature Low temperature Tumble dry	DO NOT tumble dry	

8. CARE AND CLEANING

WARNING! You must DISCONNECT the appliance from the electricity supply, before you can carry out any cleaning or maintenance work.

8.1 External Cleaning

Clean the appliance only with soap and warm water. Fully dry all the surfaces.

CAUTION! Do not use alcohol, solvents or chemical products.

8.2 Descaling

The water we use normally contains lime. It is a good idea to periodically use a water softening powder in the machine.

Do this separately from any laundry washing, and according to the softening powder manufacturer's instructions.

This will help to prevent the formation of lime deposits.

8.3 After Each Wash

Leave the door open for a while. This helps to prevent mould and stagnant smells forming inside the appliance.

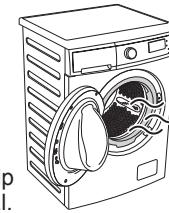

Keeping the door open after a wash will also help to preserve the door seal.

8.4 Maintenance Wash

With the use of low temperature washes it is possible to get a build up of residues inside the drum.

We recommend that a maintenance wash be performed on a regular basis.

To run a maintenance wash:

- The drum should be empty of laundry.
- Select the hottest cotton wash program.
- Use a normal measure of detergent, must be a powder with biological properties.

8.5 Cleaning The Dispenser Drawer

The washing powder and additive dispenser drawer should be cleaned regularly. Remove the drawer by pressing the catch downwards and by pulling it out. Flush it out under a tap, to remove any traces of accumulated powder.

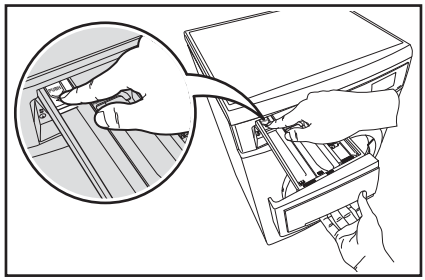

To aid cleaning, the top part of the additive compartment should be removed.

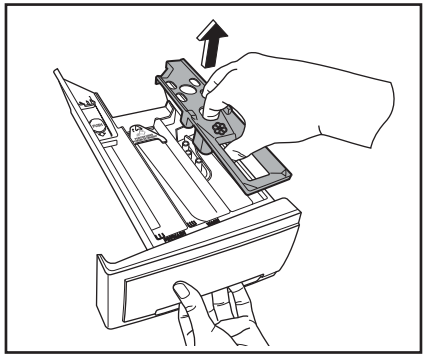

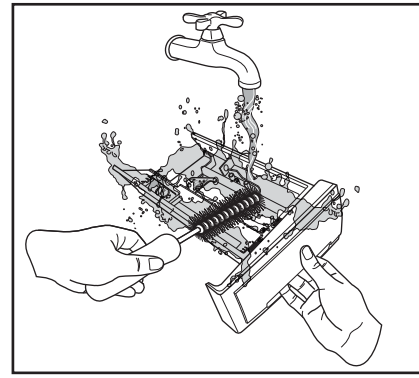

8.6 Cleaning The Drawer Recess

Having removed the drawer, use a small brush to clean the recess, ensuring that all washing powder residue is removed from the upper and lower part of the recess. Replace the drawer and run the rinse program without any clothes in the drum.

8.7 Cleaning The Pump

Regularly examine the drain pump and make sure that it is clean.

Clean the pump if:

- The appliance does not drain the water.
- The drum cannot turn.
- The appliance makes an unusual noise because of the blockage of the drain pump.
- The display shows an alarm code because of the problem with water drain.

WARNING!

1. Disconnect the mains plug from the mains socket.

2. Do not remove the filter while the appliance is operating. Do not clean the drain pump if the water in the appliance is hot. The water must be cold before you clean the drain pump.

To clean the drain pump:

1. Open the drain pump door.

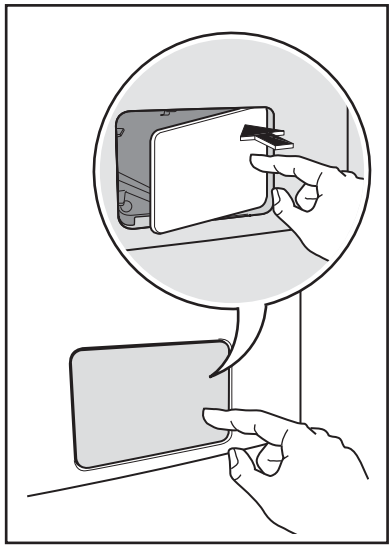

2. Place a suitable water container below the recess of the drain pump to collect the water that flows out.

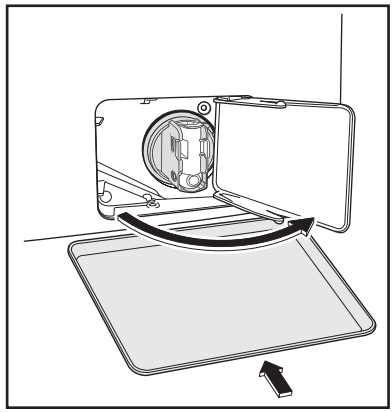

3. Press the two levers and pull forward the drainage duct to let the water flow out.

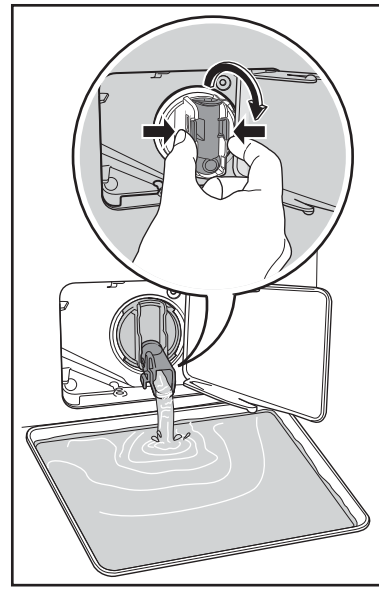

4. When the container is full of water, put the drainage duct back again and empty the container. Do step 3 again and again until no more water flows out from the drain pump.

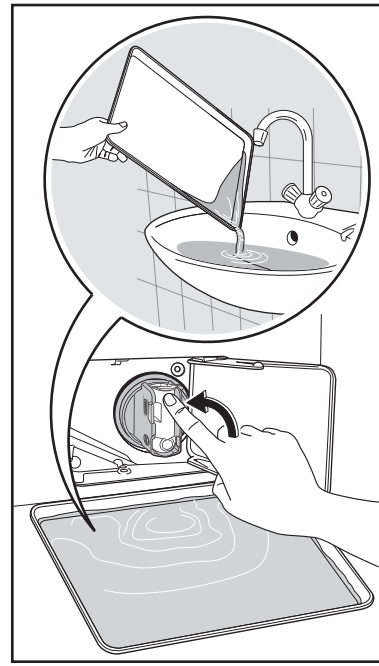

5. Pull back the drainage duct and turn the filter counter-clockwise to remove it.

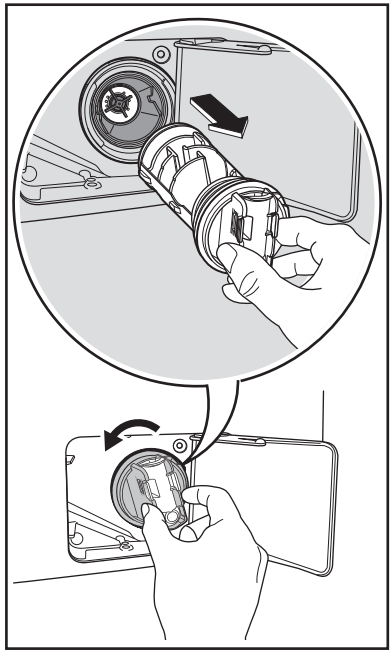

6. Remove fluff and objects from the pump filter (if there are any).

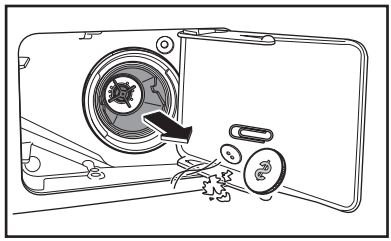

7. Clean the filter under the water tap.

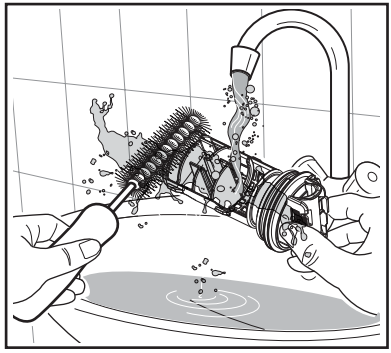

8. Make sure that the impeller of the pump can turn. If this does not occur, contact the service centre.

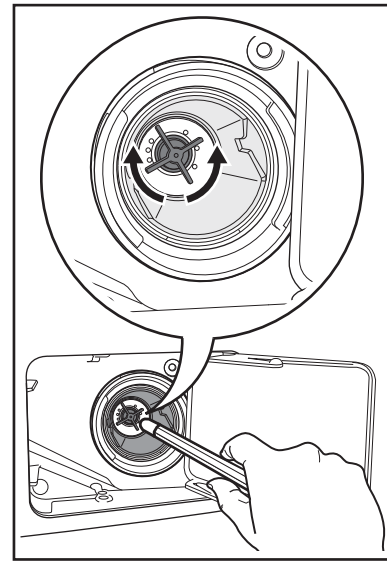

9. Put the filter back in the pump. Make sure that you correctly tighten the filter to prevent leakages.

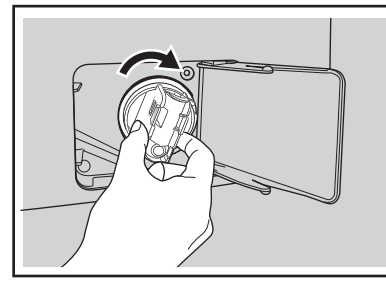

10. Close the drain pump door.

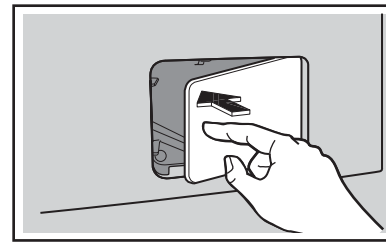

8.8 Cleaning The Water Inlet Filter

If your water is very hard or contains traces of lime deposit, the water inlet filter may become clogged. It is therefore a good idea to clean it from time to time.

To clean the water inlet filters:

1. Close the water tap.
2. Remove the water inlet hose from the water tap.

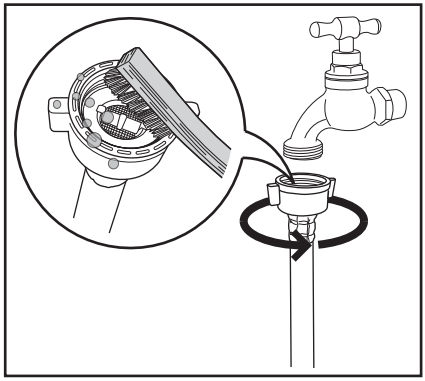

3. Clean the filter in the inlet hose with a stiff brush.
4. Remove the inlet hose behind the appliance.
5. Clean the filter in the valve with a stiff brush or a towel.

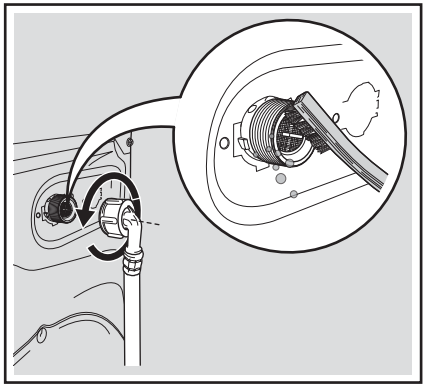

6. Install the inlet hose again. Make sure that the couplings are tight to prevent leakages.
7. Open the water tap.

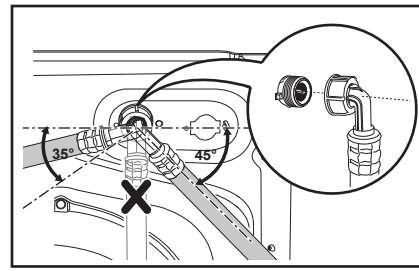

8.9 Frost Precautions

If the appliance is installed in an area where the temperature can be less than 0 °C, remove the remaining water from the inlet hose and the drain pump.

Emergency Drain

1. Disconnect the main plug from the main socket. Turn off the water tap.
2. Remove the water inlet hose.
3. Remove the drain hose from the rear support and unhook it from sink or spigot.

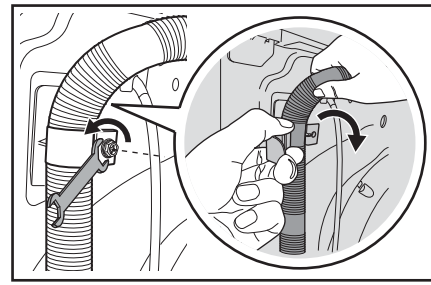

4. Put the end of the drain and inlet hose in a container. Let the water flow out of the hoses.

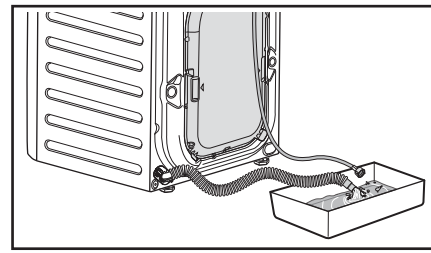

5. When no more water flows, install the inlet hose and the drain hose again.

NOTE: Make sure that the temperature is more than 0 °C before you use the appliance again.

9. TROUBLESHOOTING

9.1 Possible Failures

Certain problems are due to lack of simple maintenance or oversights, which can be solved easily without calling out an engineer. Before contacting your local Service Centre, please check possible cause of malfunction and solution listed below.

Once the problem has been eliminated, press the Start/Pause button to restart the program. If after all checks, the problem persists, contact your local Service Centre.

WARNING! Deactivate the appliance before you do the checks.

Alarm Code:

E10	The appliance does not fill with water properly.
E20	The appliance does not drain the water.
E40	The appliance door is open or not closed correctly. Please check the door!
EH0	The main supply is unstable. Wait until the main supply is stable.
E91	No communication between electronic elements of the appliance. Switch off and switch on again.
EF0	Water leaks inside the machine. Please call Service Centre.

Malfunction	Possible Cause	Solution
The washing machine does not start:	The door has not been closed. (code: E40)	Close the door firmly.
	The plug is not properly inserted in the power socket.	Insert the plug into the power socket.
	There is no power at the socket.	Please check your domestic electrical installation.
	The Start/Pause (▷II) touchpad has not been pressed.	Press the Start/Pause (▷II) touchpad.
	The “Delay End” has been selected.	If the laundry are to be washed immediately, cancel the “Delay End”.
	The Main supply is unstable. (If code “ EH0 ” appears in the display.)	Wait until the main supply is stable. Appliance will start automatically.
The machine does not fill the water:	The water tap is closed. (code: E 10)	Open the water tap.
	The inlet hose is squashed or kinked. (code: E 10)	Check the inlet hose connection.
	The filter in the inlet hose is blocked. (code: E 10)	Clean the water inlet hose filter.
	The door is not properly closed. (code: E40)	Close the door firmly.
The machine fills then empties immediately:	The end of the drain hose is too low. (code: E 10)	Refer to relevant paragraph in “water drainage” section.
The machine does not empty and/or does not spin:	The drain hose is squashed or kinked. (code: E20)	Check the drain hose connection.
	The drain pump is clogged. (code: E20)	Clean the drain filter.
	The option “Rinse Hold” has been selected.	Press Start/Pause (▷II) touchpad to drain the water or select spin program.
	The laundry is not evenly distributed in the drum.	Pause the machine and redistribute laundry manually.

Malfunction	Possible Cause	Solution
There is water on the floor:	Too much detergent or unsuitable detergent (creates too much foam) has been used.	Reduce detergent quantity and use correct type of detergent (refer page 19).
	Check whether there are any leaks from one of the inlet hose fittings. It is not always easy to see this as the water runs down the hose; check to see if it is damp.	Check the water inlet hose connection.
	The drain hose is damaged.	Call Service.
	Water leaks inside the machine. (code: EF0)	Disconnect the main plug from the main socket. Turn off the water tap. Contact your local Service Centre.
Unsatisfactory washing results:	Too little detergent or unsuitable detergent has been used.	Increase detergent quantity or use different detergent (refer page 19).
	Stubborn stains have not been treated prior to washing.	Use commercial products to treat the stubborn stains.
	The correct temperature was not selected.	Check if you have selected the correct temperature.
	Excessive laundry load.	Reduce load.
The door will not open:	The program is still running.	Wait until the end of cycle.
	There is water in the drum.	You must drain the water to open the door (refer “Opening The Door” on page 16).
	This problem may be caused by a failure of the appliance.	Contact Service. If you need to open the door, please read carefully “Emergency door opening” on next page.
The machine vibrates or is noisy:	The transit bolts and packing have not been removed.	Check the correct installation of the appliance.
	The support feet have not been adjusted.	Check the correct levelling of the appliance.
	The laundry is not evenly distributed in the drum.	Pause the machine and redistribute laundry manually.
	There is very little laundry in the drum.	Load more laundry.
	Unstable floors eg. wooden floors.	Refer to relevant paragraph in “Positioning” section.
Cycle time longer than displayed:	Detergent over dose.	Reduce the detergent quantity or use another one. (Refer page 19 “Detergents Type And Quantity Of Detergent”).
	Machine unbalance.	Redistribute laundry manually in the drum and start the spin phase again.
The cycle is shorter than the time displayed.	The appliance calculated a new time according to the laundry load.	
No water is visible in the drum:	Machines based on modern technology operate very economically using very little water without affecting performance.	

Malfunction	Possible Cause	Solution
Spinning starts late or the machine does not spin:	The electronic unbalance detection device has cut in because the laundry is not evenly distributed in the drum. The laundry is redistributed by reverse rotation of the drum. This may happen several times before the unbalance disappears and normal spinning can resume. If, after 10 minutes, the laundry is still not evenly distributed in the drum, the machine will not spin. In this case, redistribute the load manually and select the spin program.	Pause the machine and redistribute laundry manually.
The machine makes an unusual noise:	Machine not installed properly.	Make sure the levelling of the appliance is correct. Refer to “Installation”.
	Transit bolts or packaging not removed.	Make sure that the packaging and/or the transit bolts are removed. Refer to “Unpacking”.
	The load may be too small.	Add more laundry in the drum.

If you are unable to identify or solve the problem, contact our service centre. Before calling service centre, make a note of the model, serial number and purchase date of your machine: the Service Centre will require this information.

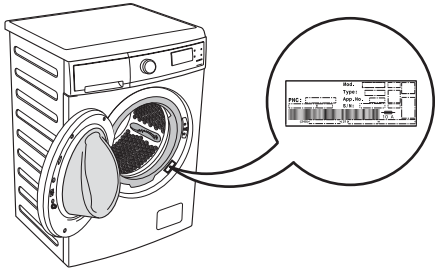

9.2 Emergency Door Opening

In case of power failure or appliance failure, the appliance door remains locked.

The wash program continues when power is restored. If the door remains locked in case of failure, it is possible to open it using the emergency unlock feature.

Before Opening The Door:

WARNING!

- **Make sure that the water temperature and the laundry are not hot. Wait until they cool down if necessary.**
- **Make sure that the drum is not rotating. Wait until the drum stops rotating if necessary.**
- **Make sure that the water level inside the drum is not too high. If necessary, perform an Emergency Drain (see page 24).**

To open the door proceed as follows:

1. Turn the program selector dial to “Off” to switch the appliance off. Disconnect the main plug from the main socket.
2. Remove the filter door, as picture below.

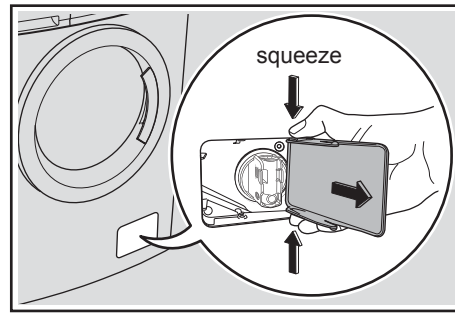

3. While pulling the emergency unlock strap (red strap) downward, pull the door handle to open the door.
4. Take out the laundry.
5. Re-assemble the filter door.

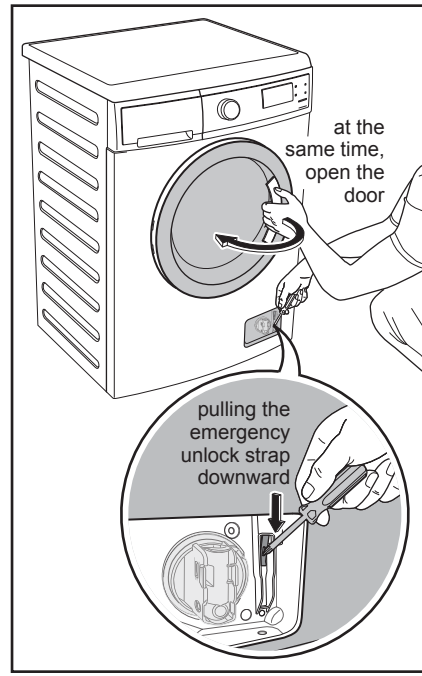

10. TECHNICAL DATA

Dimensions (Height / Width / Depth)	850 X 600 X 570 mm	
Power supply (Voltage / Frequency)	220-240 V / 50 Hz	
Total power absorbed	2100 W	
Minimum fuse protection	10 A	
Water supply pressure (Maximum / Minimum)	0.8 MPa / 0.05 MPa	
Maximum dry clothes capacity	Cottons	7.5 kg
	Mixed	3.5 kg
	Delicates	3.5 kg
	Bedding	3.0 kg
	Wool	2.0 kg
	Energy Saver	7.5 kg
	Baby Care	3.5 kg
	Quick 18	1.5 kg
	Spin	7.5 kg
	Rinse + Spin	7.5 kg
	Vapour Refresh	1.5 kg
Spin speed (Maximum / Minimum)	Model: EWF10746 1000 rpm / 400 rpm	Model: EWF12746 1200 rpm / 400 rpm

11. INSTALLATION

11.1 Unpacking

CAUTION!

All transit bolts and packing must be removed before using the appliance.

You are advised to keep all transit devices so that they can be refitted if the machine ever has to be transported again.

1. Use gloves. Cut and remove four cut out straps as shown.

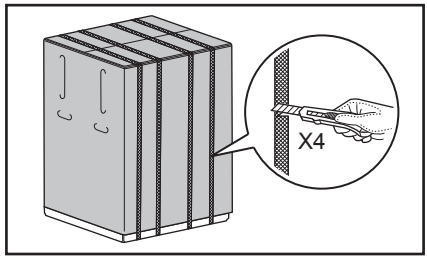

2. Remove the carton box. Remove the polystyrene packaging materials. Remove the plastic bag which cover the machine.

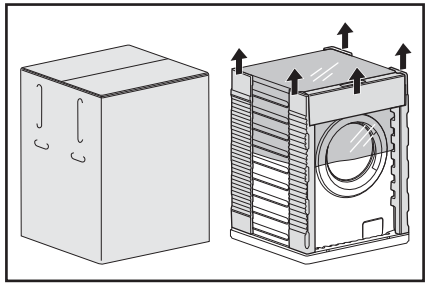

3. Open the door. Remove the polystyrene piece from the door seal and all the items from the drum.

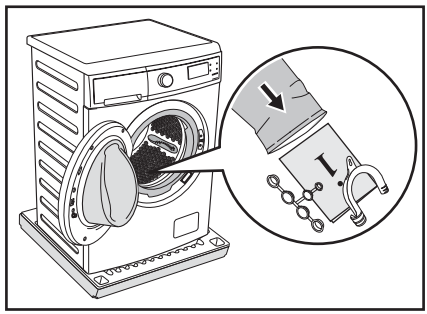

4. Put one of the polystyrene «A» packaging elements on the floor behind the appliance. Carefully put down the appliance with the rear side on it. Make sure not to damage the hoses.

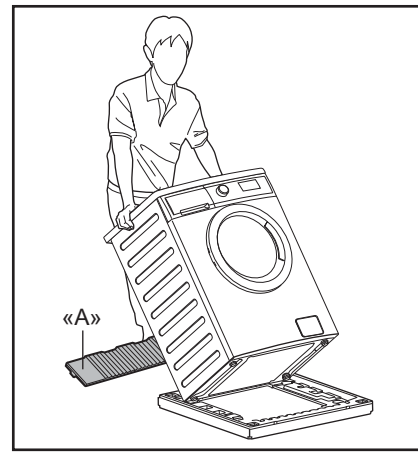

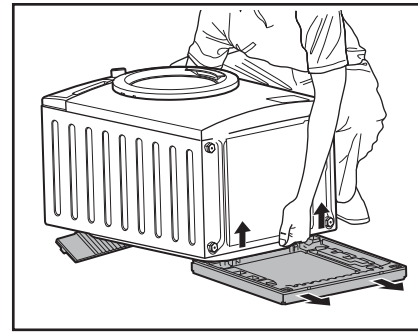

5. Remove the polystyrene base.
6. Pull up the appliance in vertical position.
7. Remove the power supply cable and the drain and inlet hoses from the hose holders «B» on the rear of the appliance.

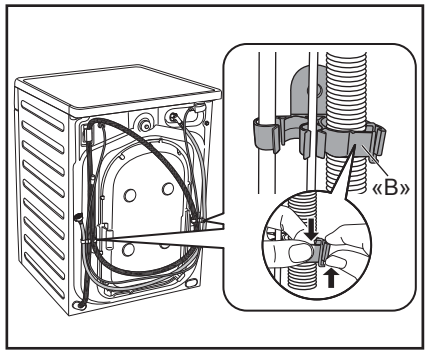

8. Remove the three transit bolts.
9. Pull out the plastic spacers.

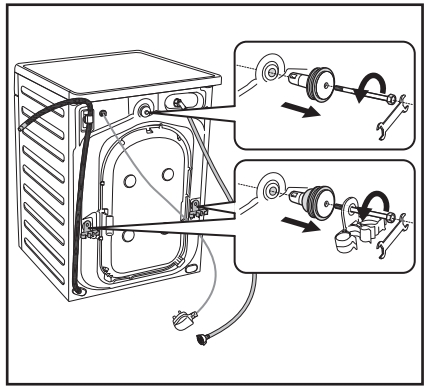

10. Put the plastic caps in the holes. You can find these caps in the user manual bag.

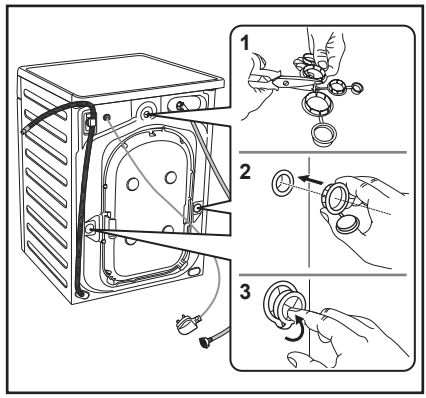

11.2 Positioning

It is important that your washing machine stands firm and leveled on the floor to ensure correct operation. The appliance must not be installed behind a lockable door, a sliding door or a door with a hinge on the opposite side to avoid restricting the washing machine door.

Use a spirit level on the top and side of the washing machine to check the levels.

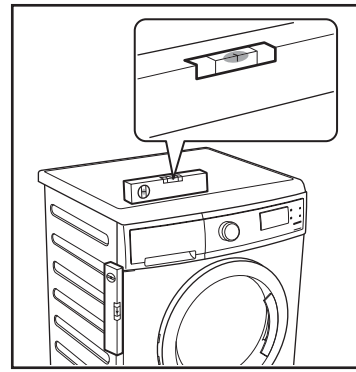

If you do not have a spirit level, as a guide use the edge of a door frame, cupboard or bench to check that the washing machine is leveled.

Loosen or tighten the feet to adjust the level. A correct adjustment of the appliance level prevents vibration, noise and the movement of the appliance when in operation.

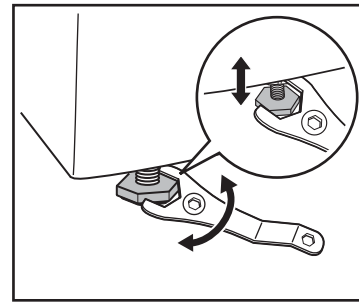

When the washing machine is levelled, try to rock it from corner to corner. If it does rock, adjust the legs again until it is levelled and does not rock.

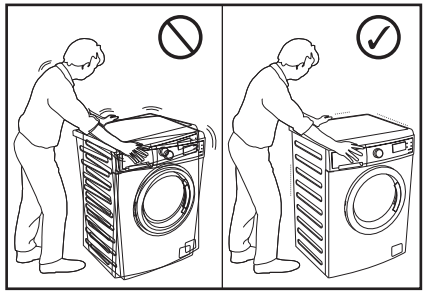

Never place cardboard, wood or similar materials under the machine to compensate for any unevenness in the floor. Install the machine on a flat hard floor. Make sure that air circulation around the machine is not impeded by carpets, rugs etc.

Check that the machine does not touch the wall or cupboard units.

11.3 Water Inlet

Connect the water inlet hose to a tap with 3/4” BSP thread.

Use the hose supplied with the washing machine. DO NOT USE OLD HOSES.

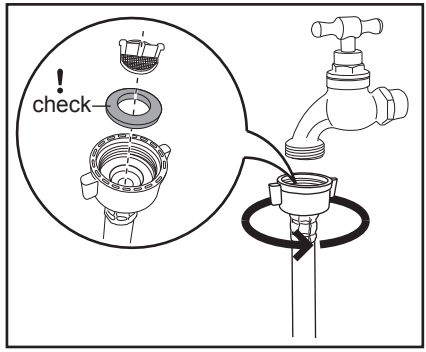

The inlet hose must not be lengthened. If it is too short and you do not wish to move the tap, you will have to purchase a new, longer hose specially designed for this type of use.

Loosen the ring nut to angle the hose to the left or right depending on the position of your water tap. Do not place the inlet hose downwards. After positioning the inlet hose, be sure to tighten the ring nut again to prevent leaks.

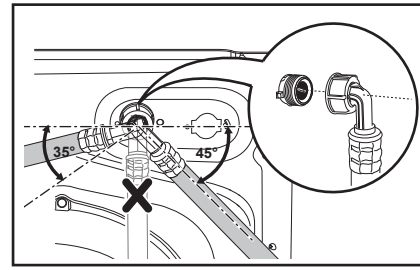

11.4 Water Drainage

The end of the drain hose can be positioned in three ways:

- **Hooked over the edge of a sink**, using the plastic hose guide supplied with the machine.

Fitting Hose Guide

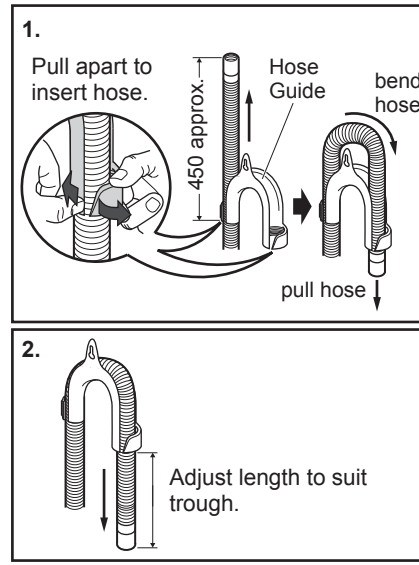

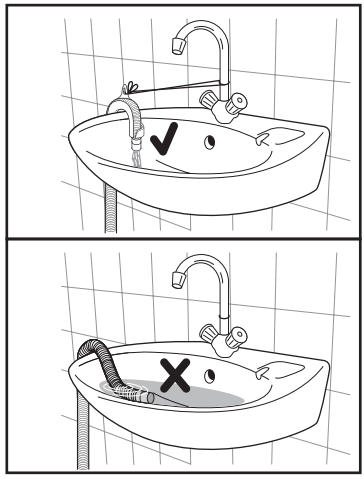

In this case, make sure the end cannot come unhooked when the machine will be emptied. This could be done by tying it to the tap with a piece of string or attaching it to the wall.

- **In a sink, drain pipe branch.**

  This branch must be above the trap so that the bend is at least 60 cm above the ground.

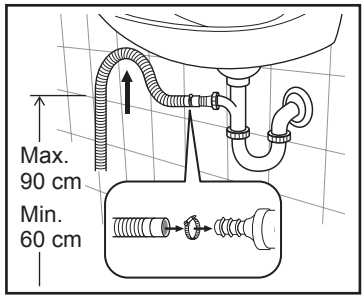

Push the drain hose onto the spigot and secure with a clip, ensure a loop is formed in the drain hose to prevent waste from the sink entering the appliance.

If the outlet spigot has not been used before, remove any blanking plug that may be in place.

- **Directly into a drain pipe,** at a height of not less than 60 cm and not more than 90 cm.

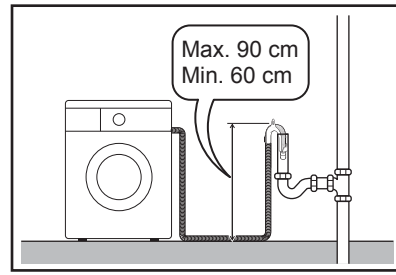

The end of the drain hose must always be ventilated, i.e. the inside diameter of the drain pipe must be larger than the outside diameter of the drain hose.

The drain hose must not be twisted or curled. Run it along the floor; only the part near the drainage point must be raised.

For the correct functioning of the machine, the drain hose must remain hooked on the proper support piece situated on the top part of back side of the appliance.

11.5 Electrical Connection

This machine is designed to operate on a 220-240 V, single-phase, 50 Hz supply.

“An incorrect power supply may void your warranty.”

Check that your domestic electrical installation can take the maximum load required (2.1 kW), also taking into account any other appliances in use.

CAUTION!

Connect the machine to an earthed socket outlet.

The manufacturer declines any responsibility for damage or injury through failure to comply with the above safety precaution.

Should the appliance power supply cable need to be replaced, this shall be carried out by our Service Centre.

When the appliance is installed, the power supply cable must be easily accessible.

If this appliance is supplied from a cord extension set or electrical portable outlet device, the cord extension set or electrical portable device must be positioned so that it is not subject to splashing or ingress of moisture.

12. ENVIRONMENT CONCERNS

12.1 Packaging Materials

The materials marked with the symbol ♲ are recyclable.

>PE<=polyethylene
>PS<=polystyrene
>PP<=polypropylene

This means that they can be recycled by disposing them properly in appropriate collection containers.

12.2 Old Machine

Use authorized disposal sites for your old appliance. Help to keep your country tidy!

The symbol on the product or on its packaging indicates that this product may not be treated as household waste.

Instead it shall be handed over to the applicable collection point for the recycling of electrical and electronic equipment.

By ensuring this product is disposed of correctly, you will help prevent potential negative consequences for the environment and human health, which could otherwise be caused by inappropriate waste handling of this product.

For more detailed information about recycling of this product, please contact your local city office, your household waste disposal service or the shop where you purchased the product.

12.3 Ecological Hints

To save water, energy and to help protect the environment, we recommend that you follow these tips:

- Normally soiled laundry may be washed without prewashing in order to save detergent, water and time (the environment is protected too!).
- The machine works more economically if it is fully loaded.
- With adequate pre-treatment, stains and limited soil can be removed; the laundry can then be washed at a lower temperature.
- Measure out detergent according to the water hardness, the degree of soil and the quantity of laundry being washed.

伊萊克斯 – 想閣下之所想！

感謝閣下購買伊萊克斯電器。閣下選擇之產品凝結了我們數十年專業經驗及創新技術。精巧時尚的外觀，儘顯人性化之設計。故每次使用，閣下都能獲得滿意的效果。歡迎走進伊萊克斯的世界。

造訪我們的網站：

獲取使用建議、產品手冊、故障解決方案以及維修服務資訊：
www.electrolux.com

客戶關懷及服務

我們推薦使用原廠備件。聯絡客服人員時，請確保提供以下資訊。閣下可以在產品銘牌上找到該等資訊。例如型號、PNC、序列號。

⚠ 警示 / 安全警告資訊。
ⓘ 基本資訊及使用提示。
環保資訊。

若有所更改，恕不另行通知。

目錄

1. 安全資訊
1.1 使用條件 36
1.2 小朋友安全 36
1.3 小朋友安全裝置 36
1.4 基本安全提示 37
1.5 安裝 37
1.6 使用 37

2. 產品示意圖
2.1 組成部分 38
2.2 配件 39

3. 控制面板
3.1 控制面板說明 40
3.2 顯示幕 40
3.3 程式表 41
3.4 程式 + 選項 42
3.5 選項 42
3.6 設定 43
3.7 啟動 / 暫停（▷‖）和添加衣物（）觸控鍵 44

4. 首次使用前 45

目錄

5. 日常使用
5.1 投入衣物 45
5.2 使用洗滌劑及洗滌助劑 46
5.3 選項設定 47
5.4 啟動程式（ ▷II ）..... 47
5.5 中斷程式 48
5.6 更改程式 48
5.7 更改選項 48
5.8 打開機門 48
5.9 程式結束 48
5.10 洗衣程式已完成，但滾筒內仍然有水 48
5.11 待機模式 49

6. 洗衣提示
6.1 對衣物進行分類 50
6.2 溫度 50
6.3 放入衣物之前 50
6.4 最大衣物重量 50
6.5 去除污漬 50
6.6 洗衣粉使用類型和用量 51

7. 國際洗衣代碼符號 52

8. 保養及清潔
8.1 外部清潔 53
8.2 除垢 53
8.3 每次洗衣後 53
8.4 維護洗滌 53
8.5 清潔投放抽屜盒 53
8.6 清潔抽屜盒之凹槽 54
8.7 清潔排水泵 54
8.8 清潔進水管篩檢程式 56
8.9 預防霜凍 57

9. 故障診斷
9.1 可能原因 58
9.2 緊急開門 60

10. 技術參數 61

11. 安裝
11.1 拆除包裝 62
11.2 洗衣機放置 63
11.3 進水 64
11.4 排水 64
11.5 電氣連接 65

12. 關注環保
12.1 包裝材料 66
12.2 廢舊洗衣機 66
12.3 環保提示 66

1. ⚠ 安全資訊

1.1 使用條件

本機適合在家庭及類似場合使用，例如：

- 農舍
- 供酒店式公寓、度假公寓以及居住型環境的客人使用。

⚠ **不得透過外部開關裝置向家電供電，如計時器，或透過實用程式連線至定期切換開關的電路。**

考慮到閣下的安全並確保正確使用洗衣機，在安裝及首次使用本機前，務請仔細閱讀此用戶手冊，包括相關提示及警告。

為避免不必要之錯誤及意外，務必要確保本機所有使用者均充分熟悉其各項操作特性及安全特性。

請妥善保留此說明書，搬運或出售本機時，應確保隨機附帶此說明書，以便各使用者於機器使用壽命內均能適當瞭解機器使用方法及安全須知。

1.2 小朋友安全

- 除非有適當之監督指導，否則此洗衣機不供小朋友或體弱多病者使用。
- 應對小朋友加以照看，確保他們不會玩耍洗衣機。
- 包裝材料組件（如塑膠薄膜、聚苯乙烯泡沫）或會危及小朋友安全 – 存在窒息危險！請妥善將其存放於小朋友無法觸及之地方。
- 將所有洗滌劑放在小朋友無法觸及之安全地方。
- 確保小朋友或寵物不會爬入滾筒。
- 本機器提供小朋友鎖保護功能（ ），以避免其誤操作控制面板。（參考第 43 頁）。

1.3 小朋友安全裝置

啟用此裝置時，機門無法關閉。此舉可防止兒童或寵物鎖在洗衣機內。

- 如需啟用此裝置，請順時針旋轉（無需按動）機門內側按鈕，直至按鈕上凹槽轉至水準位置。如有必要，可借助硬幣。
- 如需禁用此裝置以便可以關閉機門，請逆時針旋轉該按鈕，直至按鈕上凹槽轉至垂直位置。

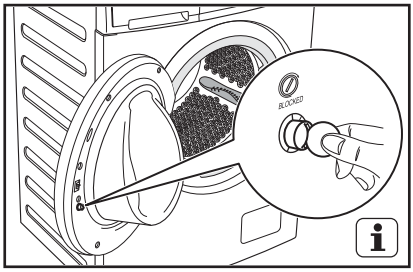

1.4 基本安全提示

- 以任何方式更改產品規格或企圖修改本產品之做法均具有危險性。
- 高溫洗衣程式運行期間，機門玻璃或會過熱。切勿觸摸！
- 確保寵物不會爬入滾筒內。為避免此情況發生，請於使用本機之前對滾筒內部進行檢查。
- 任何諸如硬幣、別針、釘子、螺絲釘、石塊等物品或任何其他堅硬、鋒利材料均可能造成大面積損壞，故不得投入洗衣機中。
- 襪子、蕾絲帶、可洗皮帶等小件物品須放在洗衣袋或枕套內洗滌，因為該等小物件或會落入洗衣桶及內滾筒之間。
- 僅使用推薦用量之衣物柔順劑及洗滌劑。若用量過大，或會損傷衣物或洗衣機。請遵循製造商之推薦用量。
- 不宜使用洗衣機洗滌含有堅硬部分之物品、未摺邊或開線之衣物。
- 每次使用、清潔以及保養本機之後，始終要拔下電源插頭並關閉水龍頭。
- 本機不適合身體殘障、感官或精神功能減退以及缺乏相關經驗及知識的人員（包括小朋友）使用，除非有負責其安全之人員對其使用本機給予監督或指導。
- 於任何情況下均不應嘗試自行維修洗衣機。由缺乏相關經驗之人員維修洗衣機或會引致人身傷害或設備嚴重故障。請聯絡閣下當地維修服務中心。
  須始終堅持使用原廠備件。

1.5 安裝

- 本機非常沉重。搬動時應多加小心。
- 拆除本機包裝時，請檢查洗衣機是否有任何損壞。若有任何疑問，請勿使用，並聯絡維修服務中心。
- 使用洗衣機之前，必須拆除所有包裝材料及運輸螺栓。否則，本產品及其他財物或會嚴重受損。請參閱本用戶手冊內相關章節。
- 洗衣機安裝完畢後，檢查並確認進水管及排水管並未被洗衣機壓住，且工作台面並未擠壓電源線。
- 若將本機擺放在鋪設地毯之地板上，請適當調整底腳，以便空氣能夠流通順暢。
- 安裝完畢後，始終要確保水管及水管連接處並無漏水現象。
- 安裝本機所需之水管敷設工作須由合資格之水管工人完成。
- 安裝本機所需之電氣工作須交由合資格之電工完成。

⚠ 或會觸電！若連接洗衣機之插座並非接地插座。請勿觸摸濕衣。

1.6 使用

- 本機專為家庭使用而設計。除了專用設計用途外，不可將本機用於其他用途。
- 僅洗滌適宜機洗之衣物。請遵循各件衣服標籤上之洗滌說明。
- 不得在本機內投入過量衣物。請參閱本用戶手冊內相關章節。
- 開始洗衣前，確保已掏空所有衣袋、扣緊紐扣並拉好拉鏈。避免洗滌有磨損或破損之物品，並在洗衣前處理顏料、油墨、鏽跡及草葉等污漬。 帶鋼圈之胸罩不可機洗。
- 接觸過揮發性石油產品之衣物不可機洗。若使用了揮發性清洗液，則務必要確保首先清除衣物上清洗液，然後再投入洗衣機內。
- 從電源插座上拔下插頭時，切勿拉曳電源線；始終須用手握住插頭。
- 若電源線、控制面板、工作台面或底座發生損壞而致使洗衣機內部顯露出來，請勿使用該洗衣機。

2. 產品示意圖

2.1 組成部分

工作台面

洗滌劑 / 柔順劑投放格

滾筒葉片升降器

玻璃門

控制面板

洗衣機門

機門拉手

排水泵篩檢程式
（參考第 54-56 頁。）

銘牌

不銹鋼鼓

機門鎖鈕，
參考第 36 頁。

水準調整腳
（前端）

運輸螺栓

電源線

排水軟管

進水軟管

運輸螺栓，
水管夾

水準調整腳
（後端）

當心！

當心：在使用洗衣機前，必須拆除所有運輸（3 組成部分）。

2.2 配件

- 塑膠蓋

用於在卸下運輸螺栓後堵住機箱背部之孔口。

- 塑膠軟管導向套

用於將排水管連接在水槽邊緣。

3. 控制面板

3.1 控制面板說明

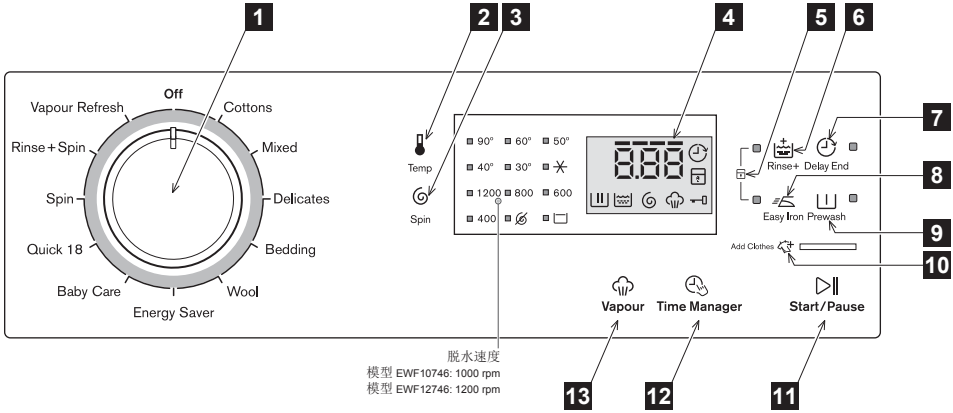

1 程式旋鈕
2 溫度觸控按鈕
3 脫水選擇觸控按鈕
4 顯示幕
5 小朋友安全鎖功能（參見第 43 頁）
6 加強漂洗觸控按鈕
7 預約剩餘時間觸控按鈕
8 防皺易熨觸控按鈕
9 預洗觸控按鈕
10 添加衣物功能圖示
11 啟動 / 暫停及添加衣物觸控鍵
12 時間管理觸控鍵
13 蒸汽觸控按鈕

3.2 顯示幕

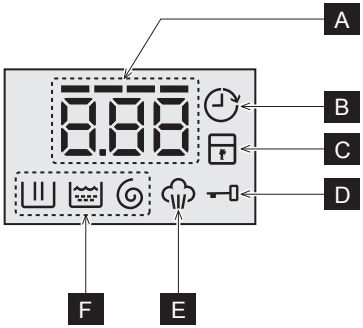

A **數字值；將指示：**
- 洗衣迴圈時間
- 預約剩餘時間
- 報警代碼。請參見「故障診斷」瞭解相關代碼說明
- Time Manager 時控級別（---）。

B 預約剩餘時間圖示

C 小朋友安全鎖圖示

D 門鎖圖示
- 圖示亮起時，無法打開機門。
- 圖示熄滅時，可以打開機門。

E 蒸汽圖示

F 洗衣階段圖示（清洗 / 漂洗 / 旋轉）

3.3 程式表

程式；溫度	最大衣物量 (晾衣服); 脫水速度		衣物類型及髒污程度
	模型: EWF12746	模型: EWF10746	
Off (關閉)	-	-	位置「Off」將重置程式 / 關閉洗衣機。
Cottons [1]；(棉質織物) ∗[2] 至 90°C	7.5 千克；1200 rpm	7.5 千克；1000 rpm	白色及彩色棉質織物。（根據土壤水準調整洗滌時間。參見第 43 頁內「時間管理」表。）
Mixed；(混合織物) ∗ 至 60°C	3.5 千克；1200 rpm	3.5 千克；1000 rpm	化纖或混合面料織物。（根據土壤水準調整洗滌時間。參見第 43 頁內「時間管理」表。）
Delicates；(纖幼織物) ∗ 至 40°C	3.5 千克；1200 rpm	3.5 千克；1000 rpm	精緻織物，如丙烯酸織物、纖維膠、聚酯類衣物。（根據土壤水準調整洗滌時間。參見第 43 頁內「時間管理」表。）
Bedding；(床上用品) ∗ 至 60°C	3 千克；800 rpm	3 千克；800 rpm	單件化纖毛毯、被罩和床單等用品之專用程式。（根據土壤水準調整洗滌時間。參見第 43 頁內「時間管理」表。）
Wool；(羊毛) ∗ 至 40°C	2 千克；1200 rpm	2 千克；1000 rpm	為帶有「純新羊毛、不縮水、可機洗」標籤之羊毛衣物專門測試的洗衣程式。
Energy Saver；(節能洗) 40°C 至 60°C	7.5 千克；1200 rpm	7.5 千克；1000 rpm	髒污程度一般之白色及不褪色棉質衣物。設定此程式可達致良好洗滌效果並降低能耗。洗衣程式時間將延長。
Baby Care；(嬰兒) ∗ 至 40 °C	3.5 千克；1200 rpm	3.5 千克；1000 rpm	髒污程度一般之棉質嬰兒衣物及精緻針織衣物。
Quick 18；(分鐘快洗) 30°C	1.5 千克；800 rpm	1.5 千克；800 rpm	化纖及混合面料織物。髒污程度較輕及需要清潔除味之衣物。
Spin (脫水)	7.5 千克；1200 rpm	7.5 千克；1000 rpm	對衣物脫水並排空滾筒內的水。
Rinse + Spin (漂洗 + 脫水)	7.5 千克；1200 rpm	7.5 千克；1000 rpm	漂洗衣物並進行脫水。
Vapour Refresh (蒸汽 清新)	1.5 衣物在蒸汽中翻轉。		此過程可除皺除味，使衣物清新。 ⓘ 此週期無需添加洗滌劑。

1) 滿負載洗滌髒污程度一般之棉質衣物時，推薦使用貼有棉質織物水能效標籤之節能洗滌程式，棉質織物 60° C 溫度選項。

2) 符號「∗」表示冷水洗滌。

3.4 程式 + 選項

程式 / 選項	脫水							
	不脫水	延遲脫水						1)
Cottons	✓	✓	✓	✓	✓	✓	✓	✓
Mixed	✓	✓	✓	✓	✓	✓	✓	✓
Delicates	✓	✓	✓	✓		✓	✓	✓
Bedding	✓			✓			✓	✓
Wool	✓	✓		✓				
Energy Saver	✓	✓	✓	✓		✓	✓	✓
Baby Care	✓	✓	✓	✓		✓		✓
Quick 18	✓	✓		✓				
Spin	✓			✓				
Rinse + Spin	✓	✓		✓				
Vapour Refresh				✓				✓

1) 蒸汽選項僅可在 40-90° C 溫度時組合使用。

3.5 選項

溫度觸控按鈕（ ）

若希望使用不同於洗衣機推薦之溫度洗滌衣物，請多次按該按鈕以升高或降低洗衣溫度。

脫水選擇觸控按鈕（ ）

若希望使用不同於洗衣機推薦之轉速為衣物脫水，請反復按此觸控按鈕以加快或減慢脫水轉速。

- 不脫水 **No Spin ( )**

  「不脫水」選項將取消所有脫水階段並增加漂洗次數。

- 延遲脫水 **Rinse Hold ( )**

  選擇此選項時，將不排空最後一次漂洗時的水，並且滾筒會定時旋轉以防止衣物褶皺。

  機門仍將保持鎖定，以提醒閣下必須排空滾筒內的水。

  機門將保持鎖定並且滾筒內有水。如需繼續洗衣程式，必須按 ▷II（啟動 / 暫停）。

加強漂洗觸控按鈕（ ）

此選項推薦用於對洗滌劑過敏之人群以及水質很軟之地區。按此按鈕將向洗衣程式中增加漂洗階段。此選項標誌將亮起。

預約剩餘時間觸控按鈕（ ）

啟動該程式之前，該選項可讓閣下將洗滌程式之結束時間從至少 1 小時界定為至多 19 小時。

若程式持續時間大於 3 小時（最小值），則「延遲結束」選項的起始值為 4 小時。

按下「延遲結束」觸摸板，選擇閣下所需之結束時間。 顯示器顯示時數，觸摸板上面的指示燈處於亮起狀態。

選擇洗滌程式之後，必須選擇該選項，然後再按下「開始 / 暫停」觸摸板。

例如，若閣下所選程式之持續時間為 3.20 小時，可將「延遲結束」時間定義為 6 小時。此意味著洗滌程式將在 6 小時內結束。（請參見下圖）

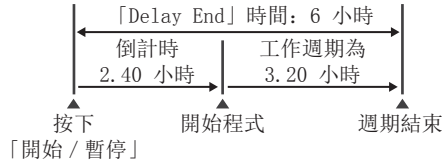

選擇「延遲結束」時間後，按下「開始 / 暫停」觸摸板，啟動該程式。 然後洗衣機將進入倒計時並在顯示器上每隔數小時就更新時間一次，直至它到達洗滌週期的起點。若啟動該程式之後閣下想修改或取消「延遲結束」選項，請執行以下步驟：

- 按下「開始 / 暫停」觸摸板，將洗衣機設置為「暫停」；
- 反復按下「預約剩餘時間」觸控鍵，直至顯示幕上顯示之預約剩餘時間為「0」，即取消選擇此選項；
- 按下「開始 / 暫停」，啟動該程式。

防皺易熨觸控按鈕（ ）

選擇此選項時，衣物將經過輕柔的洗滌及脫水過程，以防止起皺。此舉可使衣物更易於熨燙。

此選項之標誌將亮起。

預洗觸控按鈕（ ）

若希望在開始主洗之前預洗衣物，請選擇此選項。此選項適合洗滌髒污程度嚴重的衣物。此選項之標誌將亮起。

當設定此功能時，請將洗滌劑放入「 」 投放格中。
此功能將延長程式的持續時間。

時間管理（ ）

使用此選項可縮短洗衣時間。反復按此按鈕可縮短或返回默認之洗衣時間。根據所挑選之洗滌時間，此項功能將調節沖洗次數。將下表作為指南。

骯髒等級	輕度	中等	正常	沉重
洗淨等級	-	--	---	----

蒸汽洗滌觸控按鈕（ ）

選擇此選項可以在洗衣週期內添加時長約為 30 分鐘之蒸汽洗滌程式。蒸汽有助於打開衣料纖維間的空隙，使洗滌劑可以清除頑固污漬。此選項之標誌將亮起。

注意：

- 在蒸汽洗滌程式期間，蒸汽不一定在滾筒內清晰可見。蒸汽將在滾筒下方生成，然後自然上升並滲入衣物中。
- 整個蒸汽洗滌期間或不會出現蒸汽。
- 一半衣物重量時，蒸汽洗滌功能效果更佳。
- 蒸汽程式結束時，衣物將變得更為溫暖柔軟，並從滾筒中脫離。

若選擇了蒸汽洗滌選項，漂洗溫度將會升高。

在蒸汽洗滌期間，洗衣機排水管或會排出蒸汽，此屬於正常現象，不會引起報警。

3.6 設定

小朋友安全鎖功能（ ）

本機提供小朋友安全鎖功能，可以在洗衣機無人看管時保持機門關閉，從而不必擔心洗衣機對小朋友造成傷害或本身發生損壞。

按下「啟動 / 暫停」後觸摸板的設置此選項。

設定小朋友安全鎖選項：

- 如需啟用此功能，請同時按「Rinse +（ ）」和「Easy Iron（ ）」觸控按鈕，直到顯示幕上顯示「 」符號。
- 如需停用此功能，請同時按「Rinse +（ ）」和「Easy Iron（ ）」觸控按鈕，直到「 」符號熄滅。

即使已切斷洗衣機電源，此功能仍會保持啟用狀態。

啟用 / 禁用「洗滌結束蜂鳴模式」

此模式允許閣下啟用或禁用洗滌結束時的蜂鳴聲。例如閣下需要在睡覺時進行洗滌，希望禁用該蜂鳴聲，從而在大約 1 小時洗滌結束後，洗衣機不會發出聲音，以免打擾閣下休息。

此設置無法禁用所有錯誤蜂鳴聲，例如危險故障。

如需禁用蜂鳴聲，同時按住「Easy Iron（）和 Prewash（）」觸控鍵 3 秒鐘，並聽到「嗶、嗶」聲。

如需恢復默認設置，同時按住此兩個觸控鍵 3 秒鐘，並聽到「嗶」聲。

3.7 啟動 / 暫停（▷II）和添加衣物（）觸控鍵

此觸控鍵有兩個功能：

- 啟動 / 暫停（▷II）

  選定所需程式及選項後，按下此觸控鍵啟動洗衣機。啟動 / 暫停指示燈將停止閃爍並常亮，直至水位超過機門下緣。此時指示燈會熄滅。若閣下已選擇「預約剩餘時間」選項，倒計時將開始並顯示在顯示幕上。

  如需中斷正在運行的程式，按下此觸控鍵即可暫停洗衣機，啟動 / 暫停指示燈閃爍。

  如需從程式中斷時重新啟動程式，再次按下此觸控鍵，啟動 / 暫停指示燈將停止閃爍。

- 添加衣物（）

  僅在「啟動 / 暫停」燈亮起時添加衣物。

  程式正在運行時，可按以下步驟添加衣物：

  1. 按下「啟動 / 暫停」觸控鍵暫停程式。
  2. 等洗衣機完全停止後打開機門。
  3. 添放衣物，並關上機門。
  4. 再次按下「啟動 / 暫停」觸控鍵恢復程式。

  若機器滾筒內的水是熱的 – 考慮到閣下安全，門會保持鎖定。此時，LED 光源仍然保持亮起。

4. 首次使用前

在安裝過程中，還是第一次使用前，閣下可在機器內觀察到部分水。此為留在機器在出廠全功能測試後，保證了機器內剩餘水提供給客戶完美的工作秩序，是無需擔心。

1. 確保電氣及水路連接符合安裝說明。
2. 向洗滌劑投放格內加入 2 升水用於主洗階段。此操作將啟動排水系統。
3. 洗衣機內不添加衣物，選擇棉質織物程式並將溫度設定為 90° C，以去除製造過程中內筒和外筒上殘留物，然後啟動洗衣機。

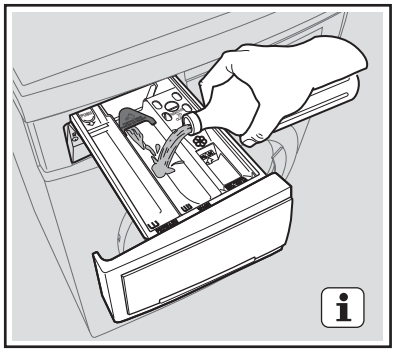

5. 日常使用

5.1 投入衣物

1. 打開水龍頭。
2. 將電源插頭插入電源插座。
3. 洗衣機將針對選定程式推薦洗衣溫度，並自動選擇脫水速度。

   選擇旋鈕可順時針或逆時針旋轉。

   位置 「Off」 將重置程式 / 關閉洗衣機。

   洗衣程式結束後，務必將選擇旋鈕旋至「Off」位置，關閉洗衣機。

4. 小心向外拉動機門拉手，打開機門。

   檢查並取出可能落入折邊處之物件（如有）。

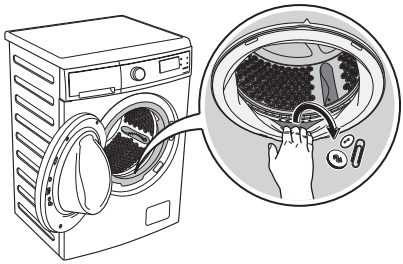

5. 將衣物投入滾筒內，每次投入一件，並盡量將衣物抖開。(50 頁，洗衣提示)
6. 關閉機門。

   當心

   確保門封及機門之間沒有夾住任何衣物。

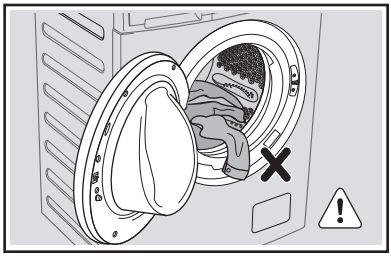

5.2 使用洗滌劑及洗滌助劑

在使用洗衣粉之前請閱讀第 51 頁內洗衣粉使用類型及用量。

1. 洗滌劑投放抽屜盒

洗滌劑投放抽屜盒分為三個投放格。

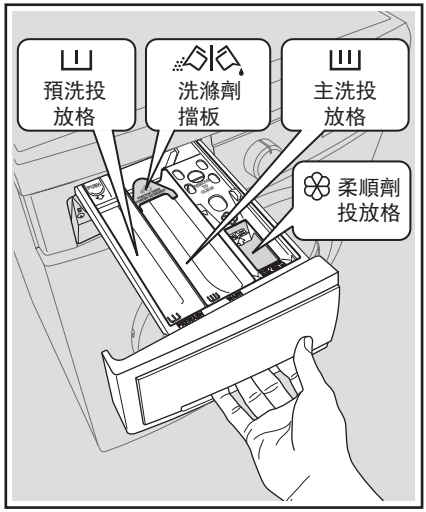

- 主洗投放格
  此投放格用於投放所有洗衣程式使用之洗滌劑。
- 預洗投放格
  此投放格僅用於在選擇預洗程式時投放洗滌劑。
- 柔順劑投放格
  此投放格用於投放衣物柔順劑及上漿劑。

洗滌劑擋板

用於投放粉狀或液體洗滌劑擋板。

使用液體洗滌劑時：

- 請勿使用膠狀或粘稠液體洗滌劑。
- 投放之液體洗滌劑不得超過最大液位線。
- 請勿設定預洗階段。
- 請勿設定預約功能。

2. 取適量洗滌劑及衣物柔順劑；

- 拉出洗滌劑投放抽屜盒，直至拉不動為止。
- 視乎需要取適量洗滌劑，倒入主洗投放格中。

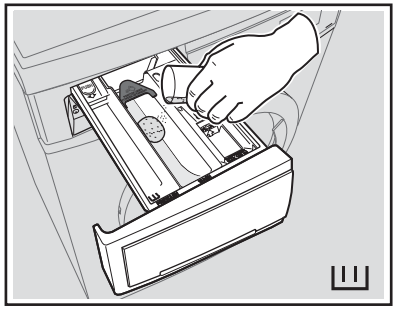

- 若需運行「預洗」階段，請將洗滌劑倒入標有 ⊔ 之投放格中。

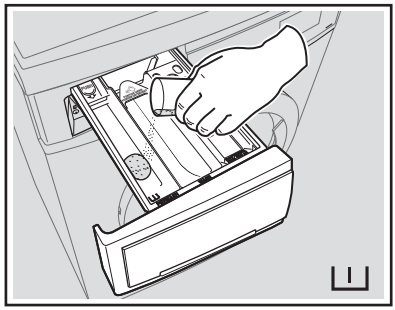

- 若需要，可將衣物柔順劑倒入標有 ❀ 之投放格中。

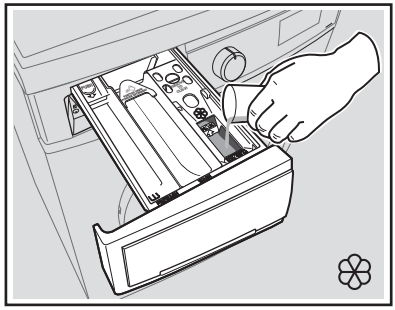

用量不得超過抽屜盒之最大標記「MAX」

推薦使用濃縮織物柔軟劑時先用水稀釋柔軟劑。

- 輕輕關上抽屜盒。

在洗滌程式完成後，洗滌劑、織物柔軟劑以及水可能會沉積在洗滌劑料盒里。推薦經常清洗洗滌劑料盒，以清除沉積物。

5.3 選項設定

1. 若希望使用不同於洗衣機建議之脫水速度及溫度洗滌衣物，請反復按脫水「 ◎ 」及溫度「 🌡 」觸控按鈕以更改脫水速度及溫度。

   若希望使用特殊功能洗滌衣物，根據需要按下相應選項觸控按鈕。

   注釋

   - 根據選定洗衣程式之不同，可組合使用各種不同功能。
   - 若選擇與預設洗滌程式不相容選項，「 --- 」消息將閃爍，並發出嗶嗶聲。

2. 若希望縮短洗衣時間，反復按「Time Manager（⏲）」觸控按鈕縮短洗衣時間。參見第 43 頁上的 Time Manager（⏲）指南。

   若希望預約洗衣程式，按預約觸控按鈕 ⏲ 選擇洗衣機預約時間。

5.4 啟動程式（ ▷II ）

要啟動程式，請按啟動 / 暫停（ ▷II ）觸控按鈕，對應的指示燈將停止閃爍，顯示幕上將顯示默認的程式持續時間。

注意！

- 若在程式正在運行時按下任何觸控鍵，顯示幕將顯示「---」消息，並發出嗶嗶聲。（啟動 / 暫停觸控鍵及電源開 / 關按鈕除外）
- 若閣下在洗衣機運行期間將程式選擇旋鈕旋轉至其他程式 （除了「Off」，以關閉機器），顯示幕上將顯示消息「---」，提示選擇錯誤。此時洗衣機不會執行新選定之程式。

程式啟動約 15 分鐘後：

- 洗衣機將根據衣物類型及衣物重量自動調整選定之程式持續時間。
- 顯示幕將顯示調整後之程式持續時間。

5.5 中斷程式

- 如需暫停程式，請按啟動 / 暫停按鈕。對應標誌將開始閃爍。
- 再次按啟動 / 暫停觸控按鈕。程式將繼續運行。

5.6 更改程式

要更改正在運行之程式，僅能關閉洗衣機電源。

- 將程式選擇旋鈕旋轉至「Off」位置，取消程式並關閉洗衣機。
- 將程式選擇旋鈕旋轉至新的程式位置，設定新的選項，然後再次按「啟動 / 暫停」觸控按鈕。

在此期間，洗衣機不會排水。

5.7 更改選項

程式啟動後，只能更改部分選項。

1. 按啟動 / 暫停觸控按鈕。對應的標誌將開始閃爍。
2. 更改選項。
3. 再次按啟動 / 暫停觸控按鈕。程式將繼續運行。

5.8 打開機門

洗衣程式或預約功能運行時，機門將保持緊鎖狀態，同時顯示幕顯示「 」標誌。首先按啟動 / 暫停觸控按鈕，將洗衣機設為「PAUSE」（暫停）狀態。待門鎖標誌「 」熄滅後，即可將機門打開。

如果門鎖標誌「 」並未消失，表示洗衣機已經在加熱，並且水位高出機門底邊，或者滾筒正在轉動。此種情況下，機門將無法打開。若閣下需要打開它，必須瀝幹水開門。（閱讀段落 「要進行排水」）

如果是緊急情況下需要立即打開門。請閱讀「緊急開門」第 60 頁上。

5.9 程式結束

- 洗衣機將自動停止運行。
- 提示聲將響起。
- 顯示幕將顯示「0」。
- 啟動 / 暫停觸控按鈕標誌將熄滅。
- 門鎖標誌「 」將熄滅。
- 將衣物從洗衣機內取出。確保滾筒已完全清空。
- 保持機門微開，以免滋生細菌及產生異味。
- 關閉水龍頭。

注釋

在洗滌程式結束時，洗滌剩餘時間或突然從 7 分鐘或更短時間縮短至 0 分鐘，此乃因為在自動感應衣服重量時所預估之總洗滌時間過長。於某些情況下（負荷完美平衡），在自動感應衣服重量之後，洗滌時間或會短於預估時間。此為機器正常工作，因此不必擔心，因其並不會影響洗滌效果。

5.10 洗衣程式已完成，但滾筒內仍然有水

（使用選項 「Rinse Hold 」）

- 滾筒將定時轉動，以防止衣物起皺。
- 該指標「Start / Pause」閃爍，提醒閣下瀝幹水。
- 門鎖標誌「 」將亮起。 機門保持緊鎖狀態。

閣下必須將水排空才能打開機門。

如需進行排水：

1. 按下「Start / Pause ▷II」觸摸板。洗衣機排水並按照所選程式之最大脫幹速度旋轉。

   或者，按「Start / Pause」觸摸板之前，閣下可按下「Spin」觸摸板改變旋轉速度。若閣下僅想排水，則可選擇「No Spin 」，然後按下「Start / Pause」 觸摸板。洗衣機將排水並旋轉。

2. 程式結束時，門鎖標誌「🔑」將熄滅，此時可以打開機門。
3. 將程式選擇旋鈕旋轉至「Off」位置，停用洗衣機。

注意：

大約 18 小時後，若閣下不按下「開始 / 暫停」觸摸板，洗衣機將自動排水並旋轉（除「Wool」程式外）。

5.11 待機模式

待機模式 功能根據以下情況自動解除機器操作以減少耗電量 ：

- 當閣下還沒按下「Start / Pause」按鈕之前也沒按下任何按鈕約五分鐘。
  - 所有標誌將熄滅，同時顯示幕將關閉。
  - 啟動 / 暫停觸控按鈕標誌將緩緩閃爍。

按動其中一個觸控按鈕可停止節能狀態。

- 在洗滌程式結束 5 分鐘後，若不取消家電，節能功能啟動。
  - 所有標誌將熄滅，同時顯示幕將關閉。
  - 啟動 / 暫停觸控按鈕標誌將緩緩閃爍。

按觸摸板之一要關閉節能狀態。

- 顯示幕顯示最後一組程式結束。
- 觸摸任何觸摸板，顯示幕顯示最後一個安裝程式及選項。
- 為程式旋鈕設定一個新週期。

6. 洗衣提示

6.1 對衣物進行分類

請遵循每件服裝標籤上的洗衣代碼符號以及製造商的洗滌說明。對衣物進行以下分類： 白色織物、彩色織物、化纖織物、纖幼織物、羊毛織物。

6.2 溫度

90°C	髒污程度一般之白色棉麻類織物（如茶巾、毛巾、桌布、床單等）。
60°C 50°C	髒污程度一般且不褪色之棉麻或化纖類衣物（如襯衫、睡袍、睡衣等）或者髒污程度較輕之白色棉質衣物（如內衣褲）。
40°C 30°C 冷水	精緻織物（如網眼窗簾），混合面料衣物（包括化纖衣物）以及帶「純新羊毛、可機洗、不縮水」標籤的羊毛衣物。

6.3 放入衣物之前

- 確保衣物內並未留下任何金屬物件（如髮夾、別針、飾針）。
- 扣好枕套、拉緊拉鏈，扣合鉤扣和按扣。系好所有腰帶或長帶子。
- 在洗衣袋中洗滌胸罩、連褲襪以及其他精細織物，閣下可以在超市購買洗衣袋。

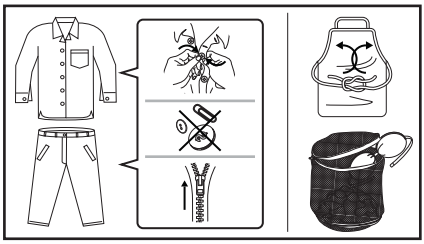

- 請確保棉纖收集器與棉質衣物分開洗滌。
- 切勿將白色及彩色衣物一同洗滌。白色衣物或會在洗衣過程喪失潔白度。
- 新的彩色衣物在初次洗滌時可能會掉色，因此第一次須單獨分開洗滌。
- 開始洗衣之前，先清除頑固污漬。
- 可用專用洗滌劑或膏狀洗滌劑擦洗特別髒污之部位。應小心謹慎地處理窗簾。可取下鉤子或者將它們系好後放入洗衣袋或洗衣網內。

6.4 最大衣物重量

程式表部分給出了推薦之最大洗衣重量。基本原則如下：

棉麻織物：	裝滿滾筒，但不能塞得太滿；
化纖織物：	不超過滾筒容量之一半；
精緻織物和羊毛織物：	不超過滾筒容量之三分之一。

按最大衣物重量洗滌可以使水及能源得到高效利用。對於髒污程度嚴重之衣物，應適當減少衣物重量。

6.5 去除污漬

僅靠水及洗滌劑或無法去除頑固污漬。因此在開始洗衣前，推薦預先對頑固污漬進行處理。

血漬：使用冷水處理新沾染血漬。 對於乾掉的血漬，先將衣物放入溶有專用洗滌劑之水中浸泡一晚，然後再用肥皂及水搓洗。

油性顏料：先用輕油去污劑浸濕，再將衣物平放在軟布上，然後輕輕擦拭污漬；進行多次處理。

乾燥油污：先用松節油浸濕，再將衣物平放在柔軟表面，然後用指尖及棉布輕輕擦拭污漬。

鏽跡：在熱水中溶解草酸，或者在冷水中使用除鏽產品。處理早先出現之鏽跡時須多加小心，因為此時衣物之纖維素結構已被破壞，所以比較容易破洞。

黴斑：用漂白劑處理，然後充分漂洗（僅限白色及不褪色衣物）。

草漬：用肥皂輕輕擦洗，然後用漂白劑處理（僅限白色及不褪色衣物）。

圓珠筆跡及膠水：先用丙酮溶液（*）浸濕，再將衣物平放在軟布上，然後輕輕擦拭污漬。

唇膏：按上述方法用丙酮溶液（*）浸濕，然後用甲基化酒精進行處理。用漂白劑去除白色織物上殘留之任何痕跡。

紅酒：在溶有洗滌劑的水中浸泡，漂洗後用醋酸或檸檬酸進行處理，然後漂洗乾淨。用漂白劑處理所有殘留痕跡。

墨水：根據墨水類型不同，先用丙酮溶液（*）浸泡衣物，然後再用醋酸浸泡；用漂白劑處理白色衣物上殘留之任何痕跡，然後徹底漂洗乾淨。

焦油污漬：先用去污劑、甲基化酒精或輕質汽油進行處理，然後用膏狀洗滌劑擦洗。

(*) 不要對人造絲織物使用丙酮。

6.6 洗衣粉使用類型和用量

本洗衣機推薦使用低泡洗衣粉以避免泡沫過多，影響洗滌性能以及對機器造成傷害。專門為滾筒洗衣機設計之低泡洗衣粉常常標示有「Low Suds」、「Super Low Suds」。比如洗衣粉「Spin」、「TOP」。不要使用錯誤類型的洗衣粉。

比如不要在本機器使用波輪式、手洗洗衣粉以及肥皂粉。錯誤洗衣粉類型可能引致過量泡沫，超長洗滌時間，較低脫水轉速，比較差的漂洗結果，甚至引致電機超載。

洗衣粉用量

正確的洗衣粉用量不僅可以保證洗滌性能，亦可以避免浪費以及保護環境。雖然洗衣粉最後能被生物降解，但洗衣粉中含有大量導致生態不平衡之物質。

選擇洗衣粉用量之依據

- 織物類型，比如精細、羊毛、純棉等等 。
- 衣服顏色
- 衣服髒污程度
- 衣服重量大小
- 洗滌溫度
- 水的硬度

水的硬度分為不同的硬度等級。

水的硬度可以從供水公司或本地相關水務管理部門獲得。

推薦初次使用時根據洗衣粉製造商的說明，然後根據洗滌結果來調整下一次洗衣粉用量。

洗衣粉用少了會導致：

- 衣服還有殘留污垢

洗衣粉用多了會導致：

- 泡沫過多
- 漂洗結果不好
- 洗滌效果不佳

在下面情況下需要減少洗衣粉用量：

- 洗滌少量衣服
- 衣服不太髒
- 洗滌過程中泡沫過多

7. 國際洗衣代碼符號

織物標籤上會帶有以下符號，以幫助閣下選擇最佳衣物護理方式。

強力洗 輕柔洗	最高洗滌溫度 95 °C	最高洗滌溫度 60 °C	最高洗滌溫度 40 °C	最高洗滌溫度 30 °C	手洗	不可洗
漂白	冷水漂白			不可漂白		
熨燙	高溫熨燙最高 200 °C	中溫熨燙最高 150 °C		低溫熨燙最高 110 °C	不可熨燙	
乾洗	可用所有溶劑進行乾洗	可用四氯乙烯、汽油、純酒精、R111 和 R113 進行乾洗		可用汽油、純酒精和 R113 進行乾洗	不可乾洗	
幹衣	平攤乾燥	懸掛乾燥	置於衣架上	高溫 低溫 滾筒乾燥	不可滾筒乾燥	

8. 保養及清潔

警告！
在進行任何清理或維護工作前，必須斷開洗衣機及電源連接。

8.1 外部清潔

僅使用肥皂及溫水清潔洗衣機。請擦幹所有表面。

當心！
不要使用酒精、溶劑或化學製品。

8.2 除垢

日常使用的水中通常含有石灰。因此最好定期在洗衣機內使用水軟化粉劑。

此項工作須與洗衣分開進行，並遵照水軟化粉劑製造商的使用說明。

此將有助於防止形成石灰質沉積物。

8.3 每次洗衣後

將機門敞開一會。此舉有助於防止洗衣機內部發黴以及產生異味。在洗衣後將機門敞開亦有利於保持門封的密封性。

8.4 維護洗滌

使用低溫洗滌時，滾筒內部或會存積部分殘留物。

我們推薦定期進行維護洗滌。

要進行維護洗滌：

- 須清空滾筒內衣物。
- 選擇溫度最高之棉質織物洗衣程式。
- 使用正常用量之洗滌劑，並且必須為生物性粉狀洗滌劑。

8.5 清潔投放抽屜盒

洗衣粉及洗滌助劑投放抽屜盒須定期清潔。

向下按壓卡鉤並向外拉出，取下抽屜盒。在水龍頭下沖洗抽屜盒內部，清除積聚之任何洗衣粉。

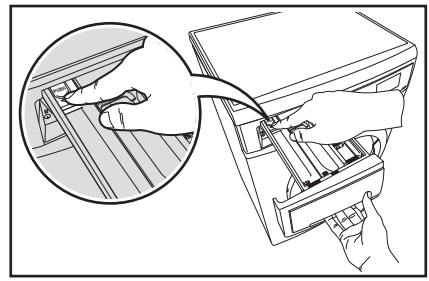

為了便於清潔，須拆下洗滌助劑投放格上部。

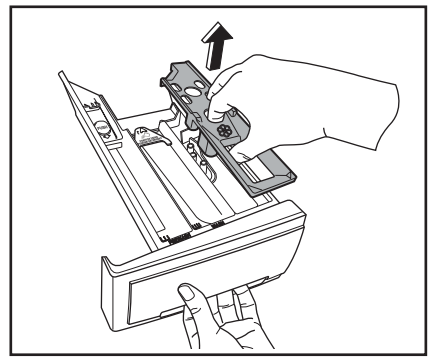

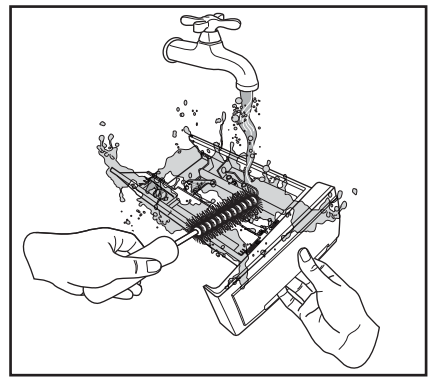

8.6 清潔抽屜盒之凹槽

取下抽屜盒後，使用小刷子清潔凹槽，確保去除凹槽上部及下部殘留的所有洗衣粉。將抽屜盒放回原位，然後滾筒內不放衣物，空機運行一次漂洗程式。

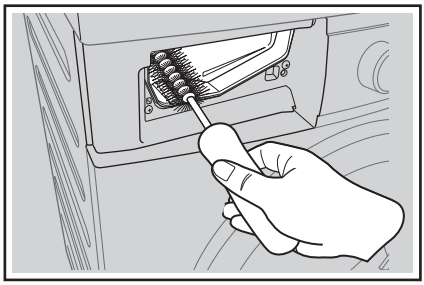

8.7 清潔排水泵

定期檢查排水泵，確保排水泵清潔。

發生以下情況時清潔排水泵：

- 洗衣機不排水。
- 滾筒無法轉動。
- 洗衣機會因為排水泵阻塞而發出異常噪音。
- 顯示幕將因排水故障顯示報警代碼。

警告！

1. 從電源插座上拔下電源插頭。
2. 洗衣機運行時不要取下篩檢程式。若洗衣機內水是熱的，不要清潔排水泵。必須待水冷卻後再清潔排水泵。

如需清潔排水泵：

1. 打開排水泵門。

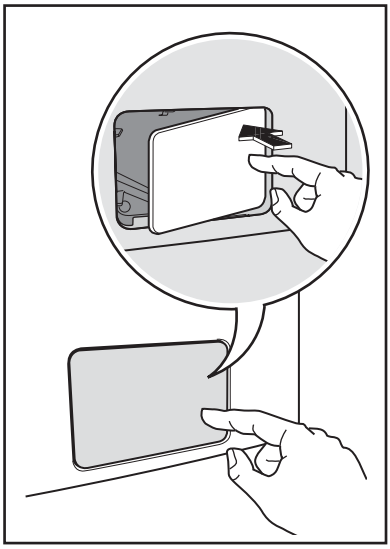

2. 在排水泵凹槽下方放置一個容器，以收集流出的水。

   按壓兩個撥杆並向前拉動疏水管，讓水流出。

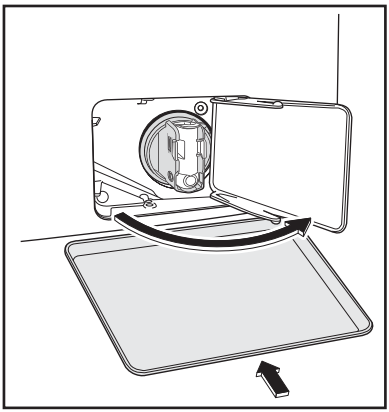

3. 按壓兩個撥杆並向前拉動疏水管，讓水流出。

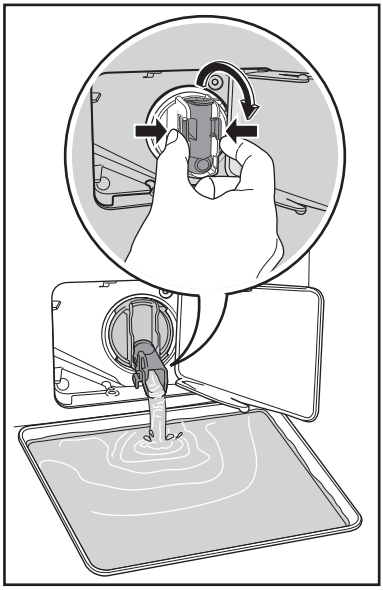

4. 容器水滿後，將疏水管放回原位，然後倒掉容器中的水。重複第 3 步，直到排水泵不再流水為止。

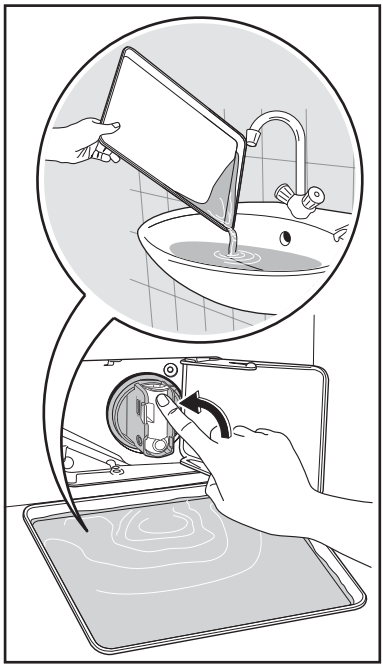

5. 將疏水管退回原位，然後旋轉篩檢程式以將其取下。

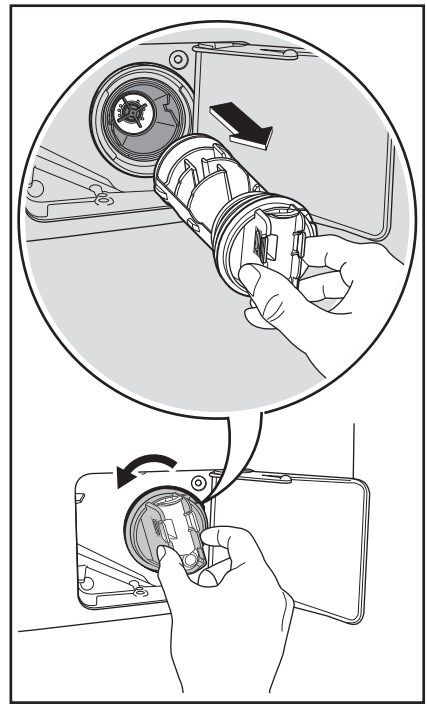

6. 清除泵中絮狀物及髒物（如有）。

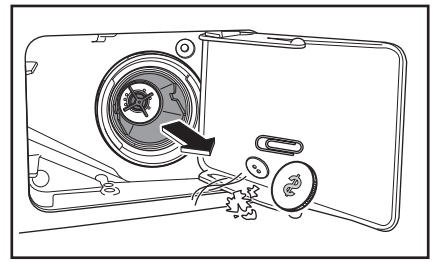

7. 在水龍頭下清洗篩檢程式。

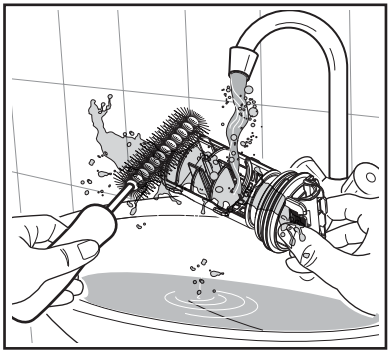

8. 確保泵輪可以轉動。若泵輪不轉動，請與維修服務中心聯絡。

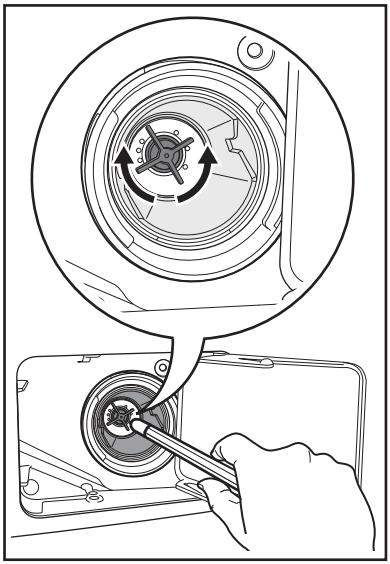

9. 將篩檢程式裝回泵中特殊導軌內。確保正確擰緊篩檢程式，以防止漏水。

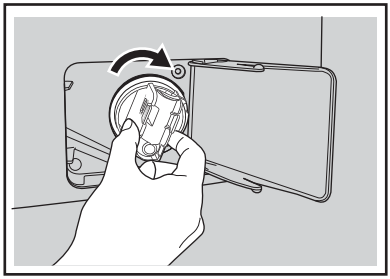

10. 將擋板推回原位，然後關閉排水泵門。

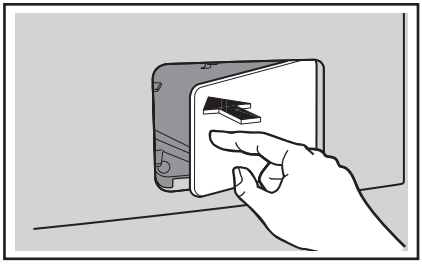

8.8 清潔進水管篩檢程式

若閣下當地之水質很硬，或者水中含有石灰質沉積物，進水管篩檢程式或會發生堵塞。因此最好時常清潔進水管篩檢程式。

如需清潔進水管篩檢程式：

1. 關閉水龍頭。
2. 從水龍頭上卸下進水軟管。

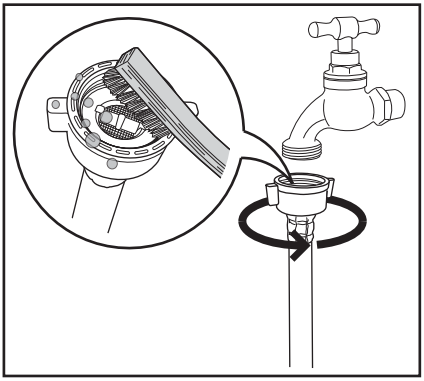

3. 使用硬毛刷清潔進水軟管篩檢程式。
4. 卸下機背進水軟管。

5. 使用硬毛刷或毛巾清潔閥門中篩檢程式。

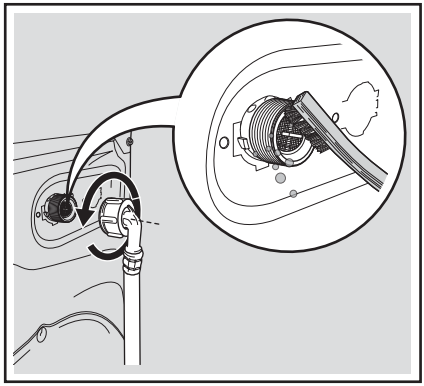

6. 重新裝好進水軟管。確保連接牢固以防止漏水。
7. 打開水龍頭。

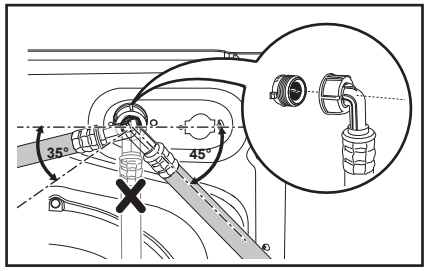

8.9 預防霜凍

如需洗衣機安裝在溫度可能降至 0° C 以下之地方，請將進水軟管及排水泵中殘留的水排空。

緊急排水

1. 從電源插座上拔下電源插頭。關閉水龍頭。
2. 取下進水軟管。
3. 將排水軟管從後部管托上取下，然後從水槽或水龍頭上摘下。

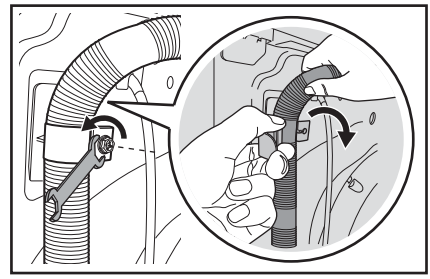

4. 將排水軟管及進水軟管末端放在一個容器內。讓軟管內的水流出。

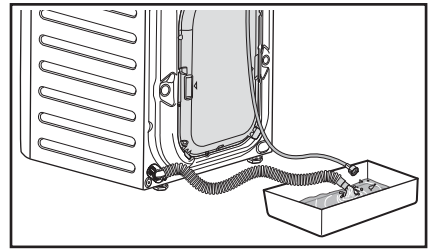

5. 待不再有水流出時，重新裝好進水軟管及排水軟管。

⚠ **再次使用洗衣機前，確保周圍溫度高於 0° C。**

9. 故障診斷

9.1 可能原因

某些問題乃由於缺乏簡單維護或疏忽造成的，此類問題無需求助專業人員，可以自己輕鬆解決。在聯絡當地維修服務中心之前，請先按照下表所列步驟進行檢查。

故障排除後，請按啟動 / 暫停按鈕重新啟動程式。若進行全面檢查後故障依然存在，請與當地維修服務中心聯絡。

⚠ **審慎！閣下做檢查之前停用該設備。**

報警代碼：

E10	洗衣機不進水。
E20	洗衣機不排水。
E40	機門未關閉或機門未完全關嚴。請檢查門！
EH0	主電源不穩定。等到電源穩定，電器就會自動開啟。
E91	該設備的電子元件之間沒有交流。關閉並重新開啟。
EF0	機器內的水泄漏。電話服務。

故障	可能原因	解決方法
洗衣機不啟動：	機門未關閉。（故障代碼：E40）	關緊機門。
	插頭未正確插入電源插座。	將插頭正確插入電源插座。
	電源插座沒電。	請檢查閣下之家庭用電設施。
	並未按啟動 / 暫停按鈕。	按下啟動 / 暫停按鈕。
	選擇了預約（Delay End）程式。	如需要立即洗滌衣物，取消預約程式。
	主電源不穩定。（如果 EH0 出現在顯示幕上。）	等到電源穩定，電器就會自動開啟。
洗衣機不進水：	水龍頭未打開。（故障代碼:E 10）	打開水龍頭。
	排水軟管被擠壓或扭結。（故障代碼：E 10）	檢查排水軟管之連接。
	進水軟管中之篩檢程式發生堵塞。（故障代碼：E 10）	清潔進水軟管篩檢程式。
	機門未完全關嚴。（故障代碼:E40）	關緊機門。
洗衣機進水，但隨即又將水排出：	排水軟管末端過低。（故障代碼：E 10）	參閱「排水」一節內相關段落。
洗衣機不排水或不脫水：	排水軟管被擠壓或扭結。（故障代碼:E20）	檢查排水軟管連接。
	排水泵發生堵塞。（故障代碼:E20）	清洗排水篩檢程式。
	選擇了「Rinse Hold ▭」選項。	按下啟動 / 暫停鍵，瀝幹水。 選擇脫水程式。
	滾筒內衣物擺放不均勻。	暫停運行洗衣機，重新手動將衣物擺放均勻。

故障	可能原因	解決方法
地面上有水：	使用了過量洗滌劑或不適合之洗滌劑（產生過量泡沫）。	減少洗滌劑用量或使用其他洗滌劑。（參考第 51 頁。）
	檢查進水軟管連接處是否漏水。 此種情況有時可能不易察覺，因為水會沿著進水軟管流下；因此請檢查進水軟管是否潮濕。	檢查進水軟管連接。
	排水軟管破損。	電話服務。
	機器內的水泄漏。（故障代碼：EF0）	從電源插座上拔下電源插頭。關閉水龍頭。電話服務。
洗衣效果不滿意：	使用了過少洗滌劑或不適合洗滌劑。	增加洗滌劑用量或使用其他洗滌劑。（參考第 51 頁。）
	洗衣前並未預先處理頑固污漬。	使用去污產品處理頑固污漬。
	並未選擇正確洗滌溫度。	檢查是否選擇了正確洗滌溫度。
	洗滌之衣物過多。	減少衣物重量。
機門無法打開：	程式仍在運行。	等待洗衣程式結束。
	滾筒內有水。	如需打開機門，必須排幹水（請參見 48 頁內「打開機門」）。
	此問題或是由電器故障引起。	與服務中心聯絡。若閣下需要打開門，請仔細閱讀下頁「緊急開門」。
洗衣機振動或有噪音：	未拆除運輸螺栓及包裝材料。	檢查洗衣機安裝是否正確。
	並未調節支撐腳。	檢查洗衣機是否水準放置平穩。
	滾筒內衣物擺放不均勻。	暫停運行洗衣機，重新手動將衣物擺放均勻。
	筒內衣物太少。	投入更多衣物。
	地面不平穩，如木質地板。	參閱「洗衣機放置」一節內相關段落。
程式運行時間超過顯示時間：	使用了過量洗滌劑。	減少洗滌劑用量或使用其他洗滌劑。參見第 51 頁 「洗衣粉使用類型及用量」
	洗衣機放置位置不平。	重新手動擺放好滾筒內衣物，然後重新開始脫水階段。 參見「洗衣機放置」一節相關段落。
週期比顯示之時間短。	設備根據衣物負載計算新的時間。	

故障	可能原因	解決方法
脫水功能啟動延遲或洗衣機不脫水：	電子失衡檢測裝置已斷開，因為滾筒內衣物擺放不均勻。滾筒通過反向旋轉重新擺放衣物。 此種情況或會在失衡情況消失前重複出現幾次，然後才可以恢復正常脫水。若 10 分鐘後，滾筒內衣物仍然無法擺放均勻，洗衣機將不會進行脫水。此種情況下，需要手動重新將衣物擺放均勻，然後再選擇脫水程式。	暫停運行洗衣機，重新手動將衣物擺放均勻。
洗衣機發出異常噪音：	洗衣機未正確安裝。	確保洗衣機水準放置平穩。請參見「安裝」一節相關內容。
	未拆除運輸螺栓或包裝物。	確保拆除包裝物及／或運輸螺栓。請參見「拆除包裝」一節相關內容。
	衣物重量或過少。	向滾筒內添加更多衣物。
滾筒內看不到水：	洗衣機採用先進技術，非常經濟划算，用水極少且又不影響洗衣性能。	

若無法確定或解決問題，請與我們的維修服務中心聯絡。

在致電維修服務中心之前，請記下閣下洗衣機型號、序列號以及購買日期： 維修服務中心需要該等資訊來為閣下解決問題。

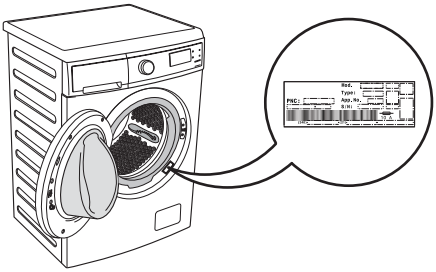

9.2 緊急開門

當遇停電情況或設備門保持鎖定狀態。電源恢復時，該洗滌程式繼續進行。但若門仍然鎖定在斷電情況下，可使用緊急解鎖功能來打開它。

開門之前：

警告！

- 確保水溫及洗衣不熱。 如必要，等到涼了才開門 。
- 確保洗衣機滾筒不旋轉。如必要，等到洗衣機滾筒停止轉動才開門 。
- 確保洗衣機滾筒內的水位不會太高。進行緊急排水（如必要）（參考第 57 頁「緊急排水」）。

開門，步驟如下：

1. 將程式選擇旋鈕旋轉至「Off」來切換裝置關閉。拔下電源插頭從主插口。
2. 去掉篩檢程式蓋。

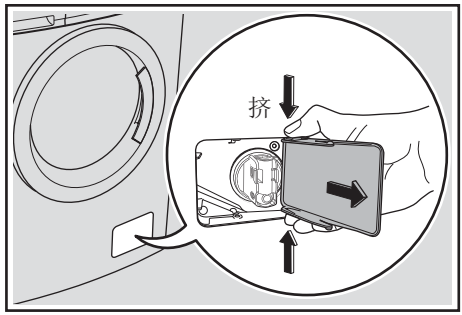

3. 保持緊急解鎖觸發器（紅色物體）向下拉，並在同一時間，打開電器箱門。
4. 取出衣物。
5. 組裝篩檢程式蓋。

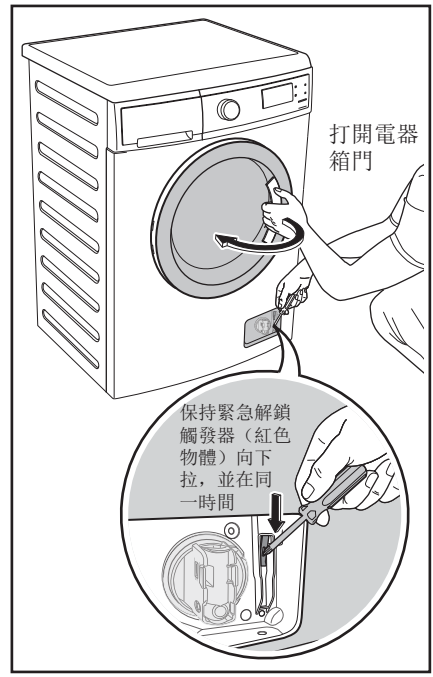

10. 技術參數

尺寸（高 / 寬 / 深）	850 X 600 X 570 mm	
電源（電壓 / 頻率）	220-240 V / 50 Hz	
吸收的總功率	2100 W	
最小熔斷保護	10 A	
供水壓力（最大 / 最小）	0.8 MPa / 0.05 MPa	
最大衣物量（晾衣服）	Cottons	7.5 千克
	Mixed	3.5 千克
	Delicates	3.5 千克
	Bedding	3.0 千克
	Wool	2.0 千克
	Energy Saver	7.5 千克
	Baby Care	3.5 千克
	Quick 18	1.5 千克
	Spin	7.5 千克
	Rinse + Spin	7.5 千克
	Vapour Refresh	1.5 千克
脫水速度（最快 / 最慢）	模型: EWF10746 1000 rpm / 400 rpm	模型: EWF12746 1200 rpm / 400 rpm

11. 安裝

11.1 拆除包裝

當心：在使用洗衣機前，必須拆除所有運輸螺栓及包裝物。推薦保留所有運輸裝置以備日後再次運輸洗衣機時使用。

1. 佩戴手套。剪切並去除 4 切出條帶，如圖所示。

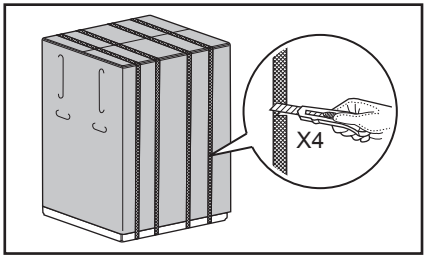

2. 取下紙箱盒。取出所有聚苯乙烯泡沫包裝材料。撕掉洗衣機外覆的塑膠包裝袋。

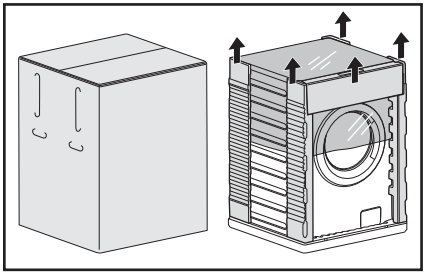

3. 打開機門。取出門封處的聚苯乙烯泡沫塊以及洗衣滾筒內的所有物品。

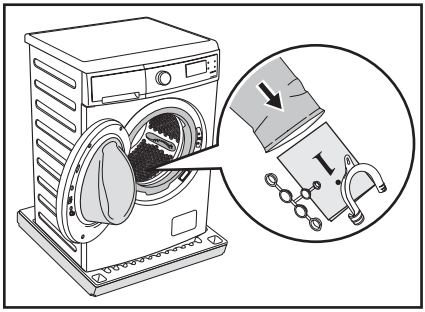

4. 將其中一塊聚苯乙烯泡沫包 «A» 裝放在洗衣機後面的地面上。 小心地將洗衣機背面朝下平放在地面上。確保不要損壞水管。

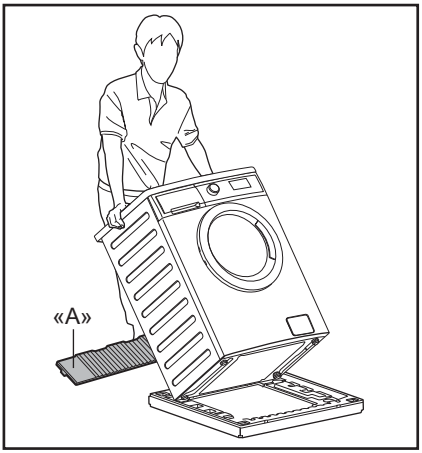

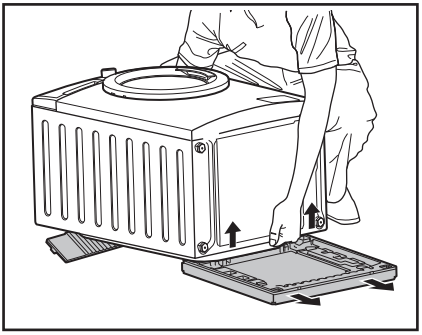

5. 拆下聚苯乙烯泡沫底座。
6. 垂直向上拉起洗衣機。
7. 將電源線以及進水和排水軟管從洗衣機背部的管夾 «B» 上取下。

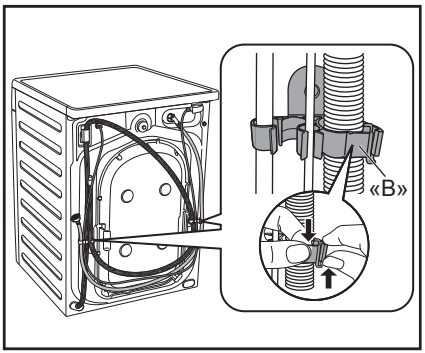

8. 拆下三個運輸螺栓。
9. 拔出塑膠墊片。

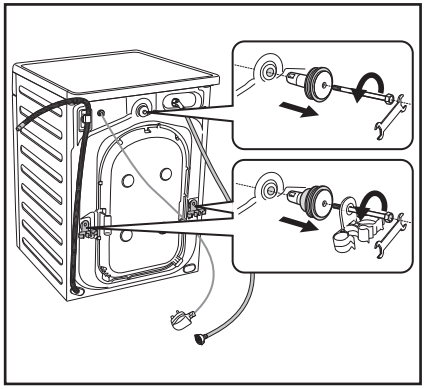

10. 在孔口處蓋上塑膠蓋。閣下可在用戶手冊包裝袋中找到該等塑膠蓋。

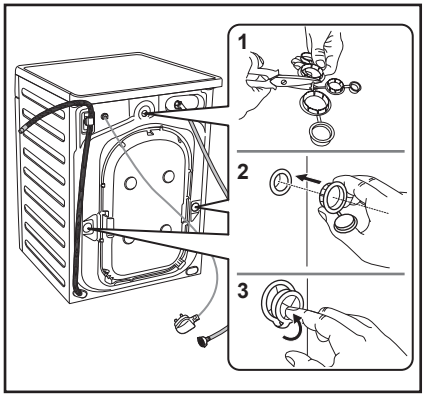

11.2 洗衣機放置

為保證洗衣機能夠正常工作，請務必將洗衣機放置於堅實平坦的地面。

不得將洗衣機安裝在帶鎖門、推拉門或合頁位置與機門相對從而會限制機門打開的門後。

在洗衣機頂部和側面放置水準尺，檢查水準情況。

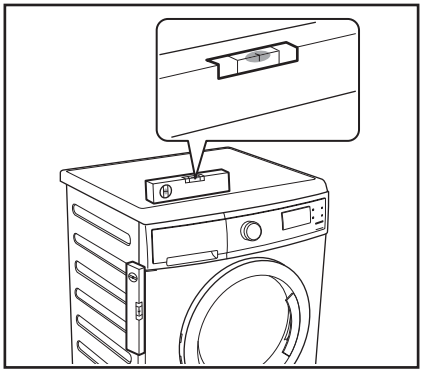

若無水準尺，可利用門框邊緣、紙板或台面作為參照物，檢查洗衣機是否處於水準狀態。

可以鬆動或收緊底腳來調節水準。 正確調節洗衣機的水準情況，可防止洗衣機在運行過程中出現振動、噪音以及位移。

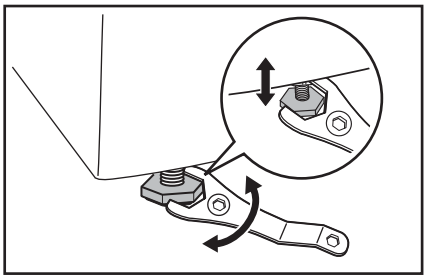

調整好洗衣機水準之後，嘗試從各個邊角搖動它。如果洗衣機發生晃動，請再次調整底腳，直到洗衣機保持水準並且不再搖晃為止。

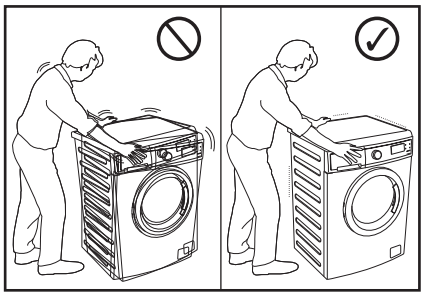

切勿在洗衣機底部放置紙板、木塊或類似物品來調節地面的不平整。

將洗衣機放置在平整堅實的地面上。確保地墊、地毯等不會阻礙洗衣機周圍之空氣流通。

檢查並確認洗衣機並未接觸牆壁或櫥櫃。

11.3 進水

將進水軟管連接至 3/4″ BSP 螺紋水龍頭。

請使用洗衣機隨附的軟管。不宜使用舊的軟管。

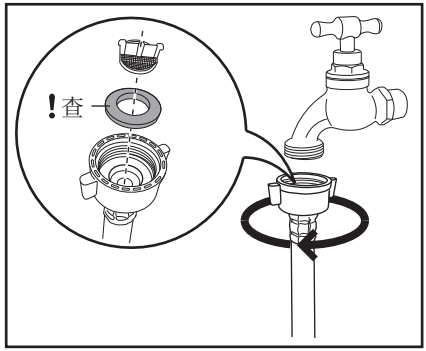

進水軟管另一端連接至洗衣機，可向任意方向自由轉動。

鬆開接頭配件，轉動軟管，再重新緊固接頭配件，確保不會漏水。

進水軟管不可延長。若軟管太短而又不想移動水龍頭，可另外購買一根洗衣機進水專用之加長軟管。

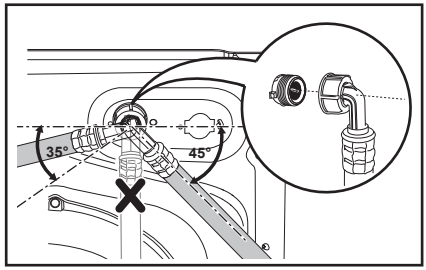

11.4 排水

排水軟管末端可採用三種方式放置：

- 使用隨機附帶之塑膠軟管導向套吊裝在洗手池邊緣上方。

安裝塑膠軟管導向套

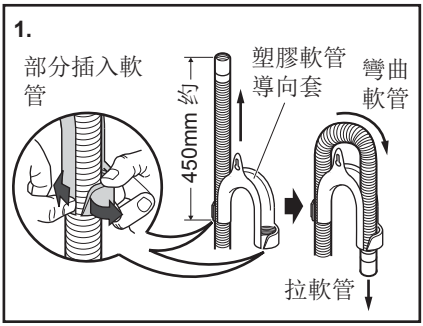

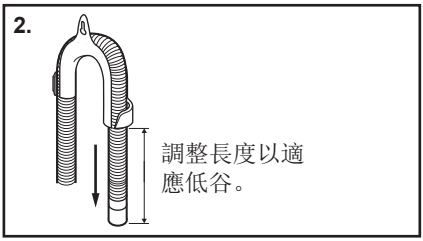

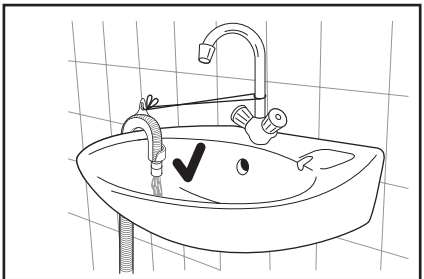

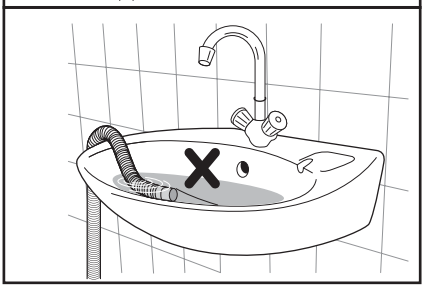

採用這種方式時，請確保出水端不會在洗衣機排水過程中脫落。如需做到此點，可將排水軟管系在水龍頭上或固定在牆上。

- 連接至洗手池的排水管道分支。此分支必須位於存水彎上方，從而使排水軟管彎曲部分至少高於地面 60cm。

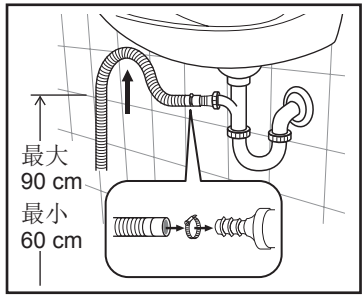

將排水軟管推至插頭上，並用夾子固定，確保排水軟管中形成一個環，以防止水槽中廢物進入設備。

如果之前並未使用過出口插口，請移除可能存在之任何堵塞插頭。

- 直接與排水管道相連，高度應在 60cm 及 90cm 之間。

排水軟管出水端必須保持暢通，即排水管道內徑必須大於排水軟管外徑。

排水軟管不得扭結。請將排水軟管沿地面放置，只有接近排水口的部分必須提高。

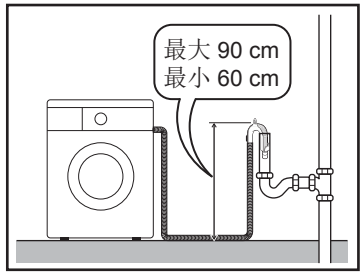

為使洗衣機能夠正常工作，排水軟管必須卡在機背上部的適當管托上。

11.5 電氣連接

此洗衣機設計使用 220-240V 單相 50Hz 電源。

⚠ 連接電源之前，請檢查額定標籤上提及之額定電源條件。

「使用不正確電源或會令保修失效。」

請檢查並確保閣下家庭用電設施可承受所需之最大負載（2.1kW），同時要考慮正在使用之任何其他電器。

⚠ 當心！洗衣機必須連接至接地插座。

對於因不遵守上述安全預防措施而造成之洗衣機損壞或人員傷害，製造商概不負責。

⚠ 電源線更換須由我們的=維修服務中心完成。

安裝洗衣機時，必須確保能夠輕鬆連接電源線。

若利用接線板或可攜式插線裝置為洗衣機供電，必須妥善放置接線板或可攜式插線裝置，確保其不會濺上液體或受潮。

12. 關注環保

12.1 包裝材料

標有 符號之材料可以循環利用。

>PE<=polyethylene
>PS<=polystyrene
>PP<=polypropylene

此表示此類材料若正確放入適當回收容器內處理，可以循環利用。

12.2 廢舊洗衣機

選擇經授權之廢物處理點處置閣下之廢舊電器。請為保持環境整潔貢獻閣下之力量！

產品或產品包裝上標記的 符號表示此產品不可作為生活垃圾處理。

而是須送至適當收集點，作為電氣電子設備進行回收利用。

確保正確處置本產品將有助於防止因本產品之不當廢物處理而可能對環境及人體健康造成之負面影響。

有關回收利用本產品之更多詳細資訊，請聯絡閣下當地市政辦公機構、生活垃圾處理服務站或閣下購買產品之商店。

12.3 環保提示

為節水節能及保護環境，我們推薦閣下遵循下列提示：

- 為節省洗滌劑、用水以及洗衣時間（亦可以保護環境），髒污程度一般之衣物可以不進行預洗。
- 洗衣機滿載衣物運行時會更加經濟。
- 對衣物進行適當預處理可去除污漬及輕微髒污，從而可以選擇較低溫度洗滌衣物。
- 根據水質硬度、衣物髒污程度和衣物重量取用適量洗滌劑。

www.electrolux.com

G0014304-001-A00973067